IColor 560 White Toner Transfer Printer User Manual

ProRIP Essentials Dongle-less Version

Table of Contents

Installation Environment	Page 3
IColor 560 Model Summary	Page 3
Machine Guide	Page 4 - 8
Unpacking and Installing Consumables	Page 9 - 11
Loading Paper	Page 12 - 15
Cable Connections	Page 16
Wireless Setup	Page 16 - 20
IColor ProRIP Essentials Introduction	Page 21
Cartridge Configuration	Page 22
Installation	Page 23 - 25
Validating and Activating	Page 26 - 27
Toolbar	Page 28
Importing Graphics	Page 28
Print Settings Tab	Page 29
Toner Reduction (Rasterization)	Page 30
Sizes Tab	Page 32
White Creation Tab	Page 32
Color & Toner Tab	Page 33
Alignment Buttons	Page 33
Mouse Right-Click	Page 34
Select and Replace Colors	Page 35
Step and Repeat	Page 35 - 36
Sending a Job to the Printer	Page 36
Warnings	Page 36
Toner Cartridge Replacement Guide	Page 37
Use Genuine UNINET IColor Consumables	Page 37
Printing with Fluorescent and Dye Sublimation Toner	Page 38
Why use IColor SmartCUT?	Page 39
Split Image Using SmartCut	Page 40 - 43
Replacing the Print Cartridges	Page 44 - 46
Replacing the Waste Toner Bottle	Page 46 - 48
Cleaning the Toner Density Sensor and LD Unit Dust Shield	Page 48 - 49
Cleaning the Registration Roller	Page 49 - 50
Cleaning the Paper Tray, Friction Pad and Paper Feed Roller	Page 50
Removing Paper Jams	Page 51 - 52
Replacing the Fusing Unit	Page 53
Resetting the Fusing Unit	Page 54
Color Registration Procedure	Page 55 - 56
IColor 560 Printing Tips	Page 57
Available transfer paper and media options	Page 58
IColor 560 System Specifications	Page 59

August 2024 Edition – A newer version of this manual may be available at www.icolorprint.com/support

Installation Environment

⚠ **Install the printer in the following environment.**
- **Optimal Humidity Level: 45% - 65%**
- **Optimal Temperature Range: 50°F / 10°C - 75°F / 24°C**

⚠ **Operation outside of these recommend parameters may lead to poor results.**

⚠ **The use of a dedicated circuit of at least 15 amps is required to avoid potential fusing issues.**

⚠ **Power consumption (max): 11 amps (120v models) or 6 amps (230v models)**

IColor 560 Digital Color + White Transfer Media Printer

The IColor 560 printer has been developed to produce high-quality, conventional color prints with the out-of-the- box functionality of printing in white.

Please follow the enclosed quick setup guide, as well as this manual, to get started. The IColor 560 comes complete with a total of 5 toner cartridges for full color and black printing (CMYK), as well as our exclusive fluorescent white cartridge. Quickly swap the black for white when you want to add white as a spot color, or to print a white underprint or overprint in concert with the IColor ProRIP Essentials software. Black can then be produced using composite black (made from 100% CMY).

You will also have the option to add fluorescent toner or dye sublimation toner upgrade kits, as well as the exclusive IColor security, clear, gold and silver toner options, at any time.

Please note that vector and line art images, including text, are likely to produce the best results. For exciting design ideas and suggestions for using the IColor 560 for maximum effect, please visit our website at www.icolorprint.com.

IColor Transfer media has been optimized to provide quality results when used with the printer, enabling the user to produce eye-catching designs which may be applied to a variety of textiles and surfaces.

What's so unique about the IColor 560 Digital Color + White Transfer Media Printer?

- The ability to print white as an underprint AND an overprint in the same machine, in one pass, using the IColor ProRIP Essentials software.
- The white opacity of UNINET's unique blend of toner is double that of any other brand, giving you the brightest whites and solid backgrounds to bring out the vibrancy of your colors.
- The true black cartridge is included with the printer, allowing you to switch to CMYK mode to print items such as brochures and menus when white is not needed.
- Optional dye sublimation, fluorescent, security, gold, silver and clear toner cartridge options.
- Lowest cost and most flexible machine available.
- No maintenance typical with ink based machine is necessary. The IColor 560 is a toner based system.
- Large array of media available for virtually any project.
- Global sales, support and service direct from UNINET or its dealer network.

Machine Guide

Exterior: Front View

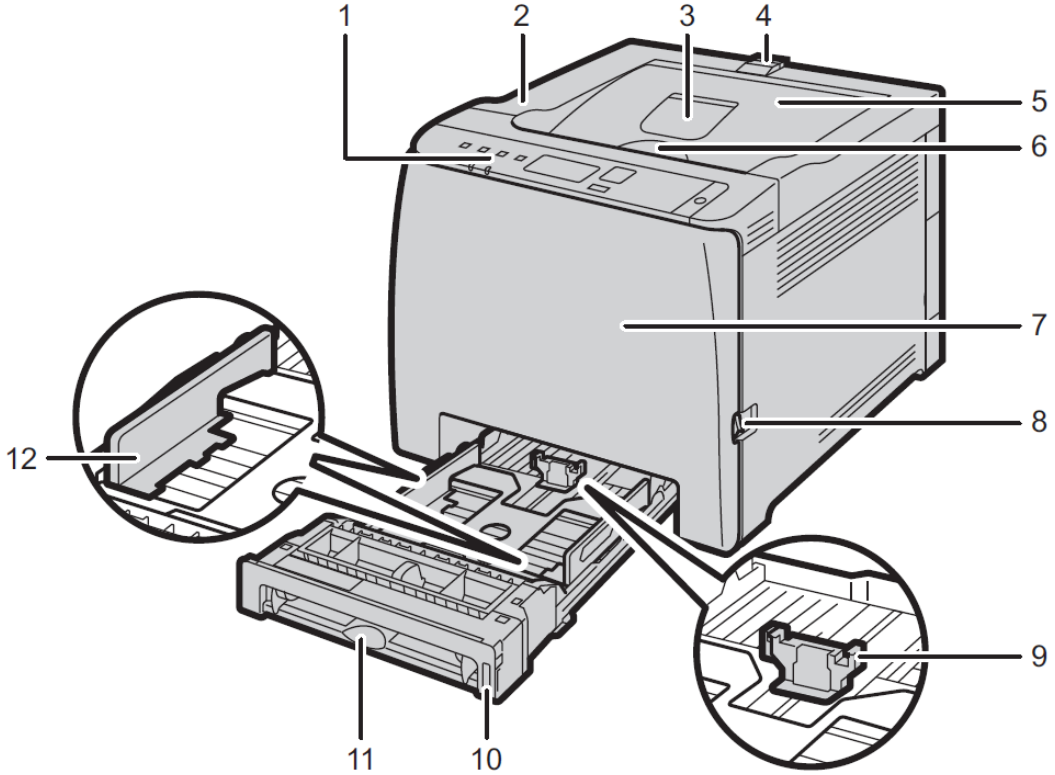

No.	Name	Description
1	Control Panel	Contains keys for machine control and indicators that show the machine status.
2	Top Cover	Open this cover to replace the print cartridge.
3	Standard Tray Extension	Use this to support sheets that come out curled after they are printed. Flip open the extension by pushing down on the end that is toward the rear of the machine.

No.	Name	Description
4	Stop Fences	Pull up this fence to prevent paper falling off when printing a large amount of paper at a time. The fence can be adjusted at the A4/Letter or Legal size position.
5	Standard Tray	Delivered sheets are stacked here with the print side down.
6	Top Cover Open Lever	Open here to replace the print cartridges.
7	Front Cover	Open this cover to replace the waste toner bottle or remove jammed paper.
8	Front Cover Open Lever	To open the front cover, pull this lever on the right side of the machine.
9	End Fence	Adjust this fence to the paper size.
10	Tray 1	This tray can hold up to 250 sheets of plain paper.
11	Bypass Tray	Load paper here sheet by sheet.
12	Side Fence	Adjust this fence to the paper size.

Exterior: Rear View

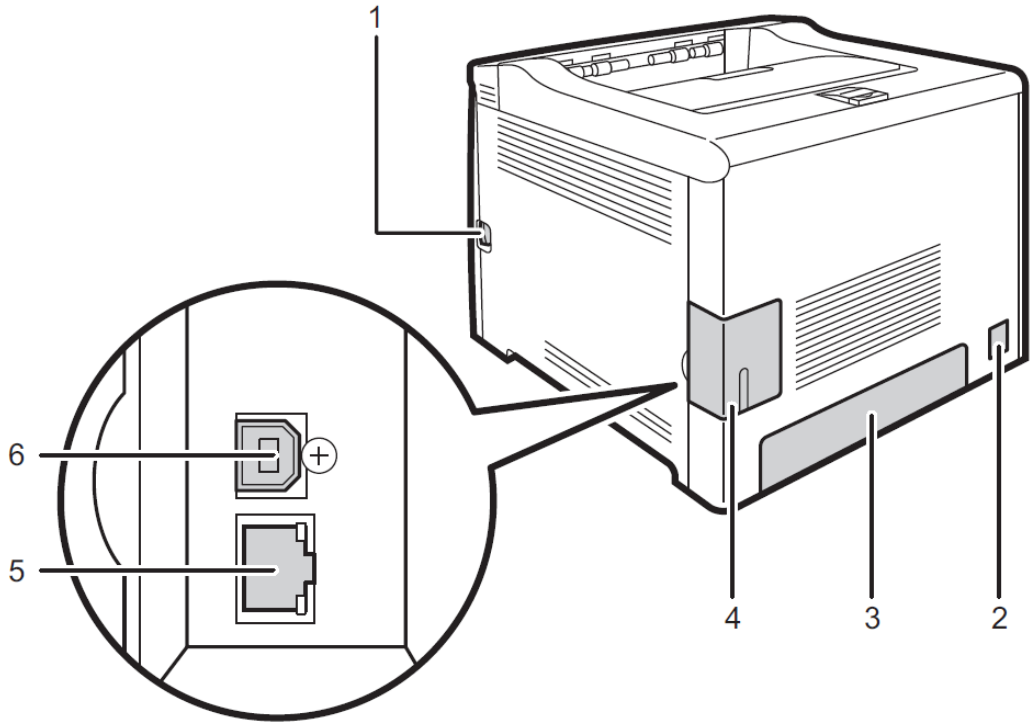

No.	Name	Description
1	Front Cover Open Lever	To open the front cover, pull this lever on the right side of the machine.
2	Power Socket	For connecting the power cord to the machine.
3	Rear Cover	Remove this cover when loading paper longer than A4 in Tray 1.
4	Cable Cover	Remove this cover when connecting cables to the machine.
5	Ethernet Port	For connecting the machine to the network using a network interface cable.
6	USB Port	For connecting the machine to a computer using a USB cable.

Interior

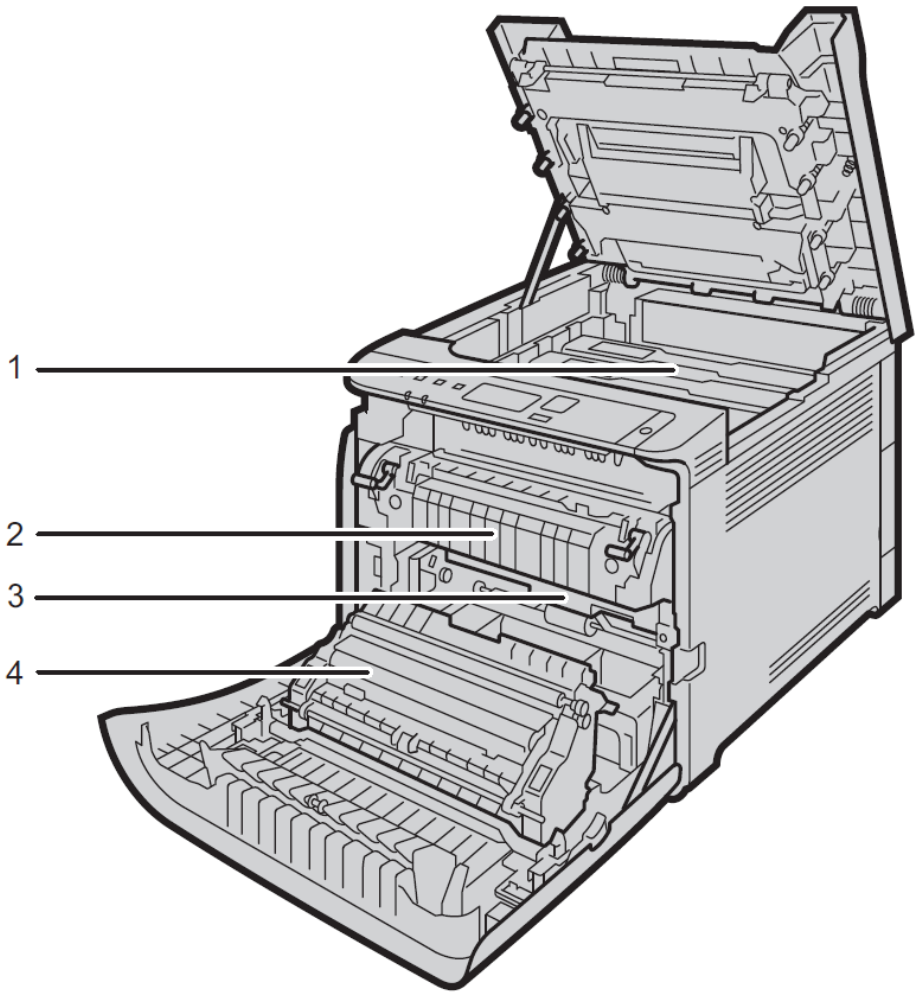

No.	Name	Description
1	Print Cartridge	Install the print cartridges from the machine rear, in the order of cyan (C), magenta (M), yellow (Y), and black (K). Messages appear on the screen when print cartridges need to be replaced, or new ones need to be prepared.
2	Fusing Unit	Fuses toner to the paper. You might have to move this unit to check for or remove jammed paper.
3	Waste Toner Bottle	Collects toner that is wasted during printing.
4	Transfer unit	You need to remove this when you replace the waste toner bottle.

Control Panel

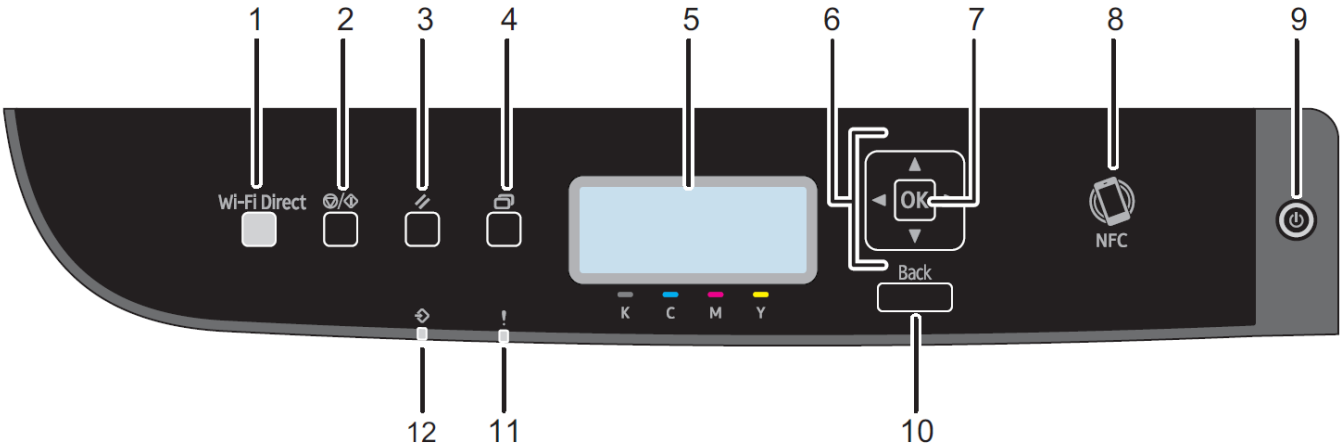

No.	Name	Description
1	[Wi-Fi Direct] key	Pressing this key while Wi-Fi is disabled activates Wi-Fi and reboots the machine automatically. Press this key while Wi-Fi is enabled to activate or deactivate the Wi-Fi Direct function. This indicator lights blue when the Wi-Fi Direct function is active. After a long press of this key, configure the WPS using the PIN code or in PBC mode. For details, see Setup Guide.
2	[Stop/Start] key	Press this key to stop receiving incoming data from the computer.

3	[Job Reset] key	Press this key to cancel a job that is currently being printed or received.
4	[Menu] key	Press this key to configure or check the machine settings. Press the [Menu] key again to return to the initial screen.
5	Display	Displays the current status and messages.
6	Scroll Keys	Press to move the cursor in the direction indicated by the key.
7	[OK] key	Press this key to confirm settings and setting values, or move to the next menu level.
8	NFC	Allows you to connect a smart device to the machine when you touch NFC on a smart device using the application corresponding to the machine.
9	[Power] key	Press to turn on and turn off the main power. To turn off the machine, press and hold down this key for at least three seconds. This indicator lights up blue when the machine is turned on. If the machine's system is busy, the power may not be turned off even though you press and hold down this key for three seconds. If this is the case, press and hold down the [Back] key and [Power] key simultaneously for at least three seconds to force the machine to turn off. Do not accidentally press the [Power] key within 3 minutes of disconnecting the power cord.
10	[Back] key	Press to cancel the last operation or to return to the previous level of the menu tree.
11	Alert Indicator	Lights up in red whenever an error occurs. Check the displayed error message. Flashes in yellow when the toner has nearly run out.
12	Data In Indicator	Flashes when the machine is receiving data from a computer. This indicator lights up when there is a Locked Print file stored in the machine.

Unpacking and installing consumables

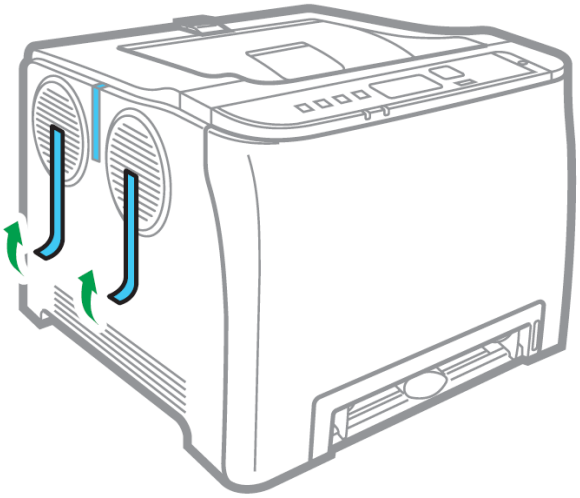

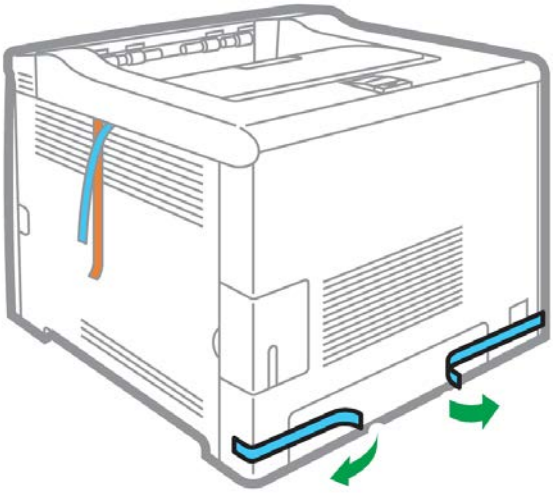

1. Remove security tape and packing material from around the printer.

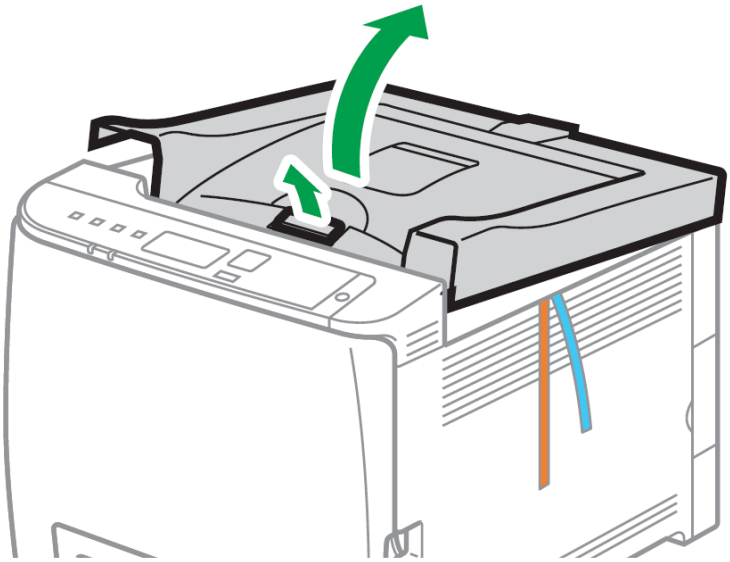

2. Open top lid.

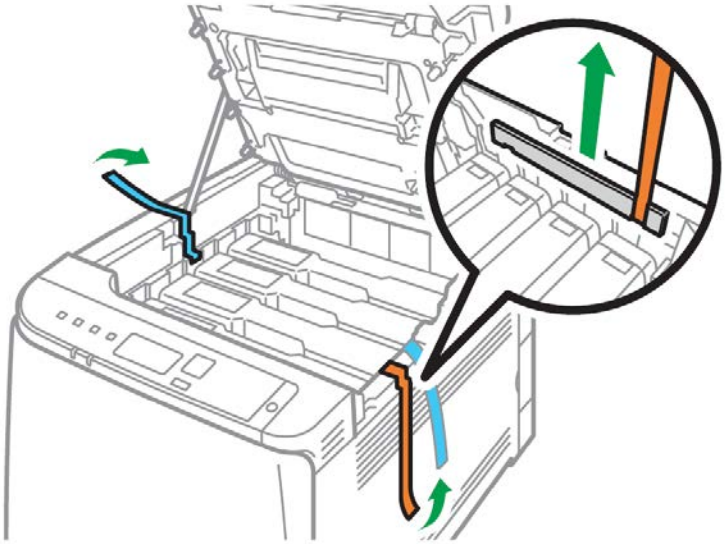

3. Remove security tape and packing material from inside the printer.

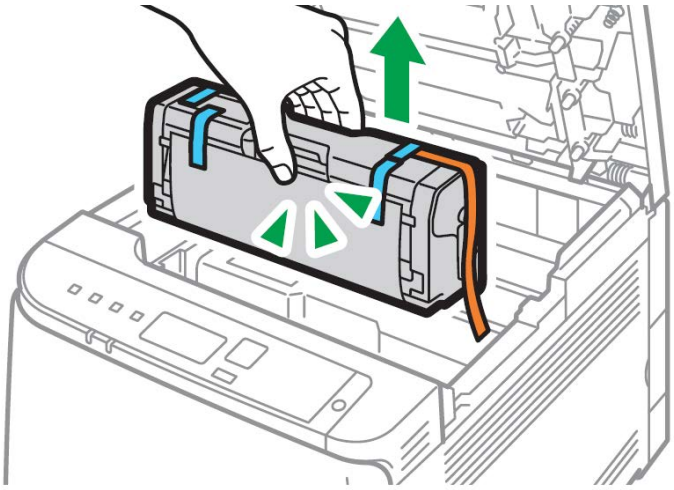

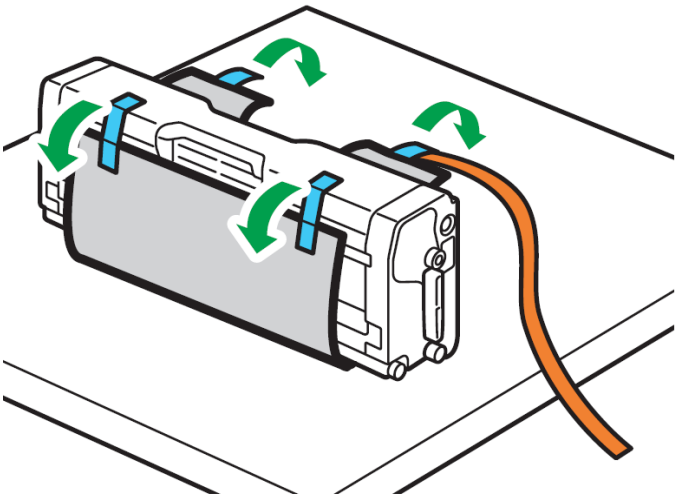

4. Remove the white toner cartridge from the front of the machine.

- Place it on a flat, solid surface and carefully remove the black security paper.

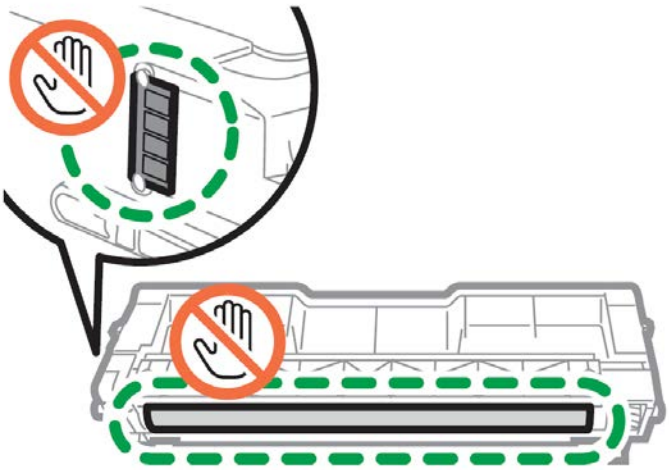

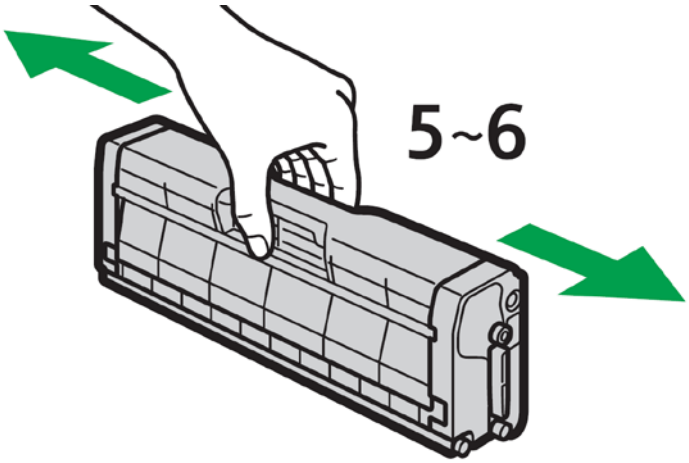

5. Be careful not to touch the drum or the contacts on the side of the cartridge.

- Remove each cartridge and gently shake back and forth 5 or 6 times to loosen the toner that may be settled in the cartridge due to shipping.

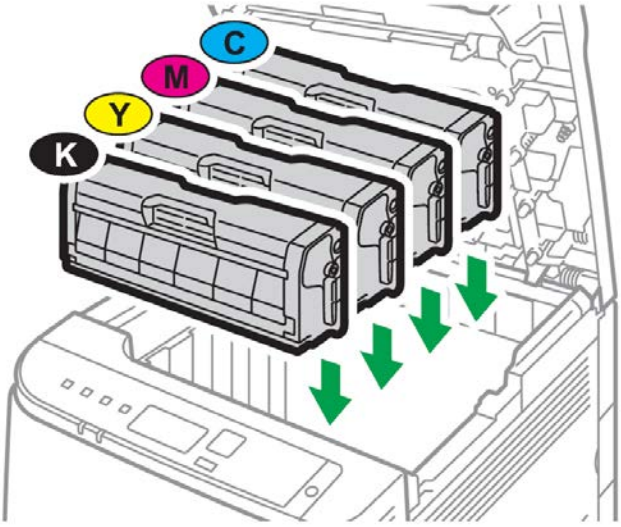

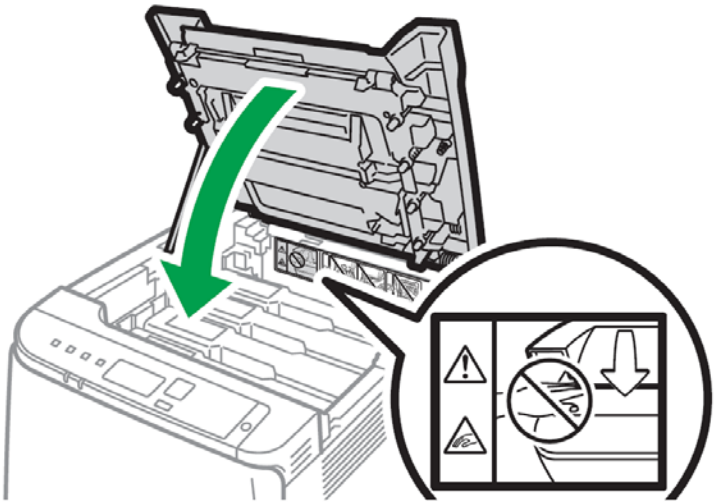

6. Reinstall the cartridges in the desired configuration (in the above representation, white or black can go into the first slot) and close the lid.

- Use white for transfer printing and black for normal CMYK printing.
- The black cartridge is packed separately in the box for your convenience.

Loading Paper

⚠ Incompatible transfer media should not be used. The IColor ProRIP Essentials print mode dropdown contains a list of all certified media. Follow specific transfer media instructions for best results.

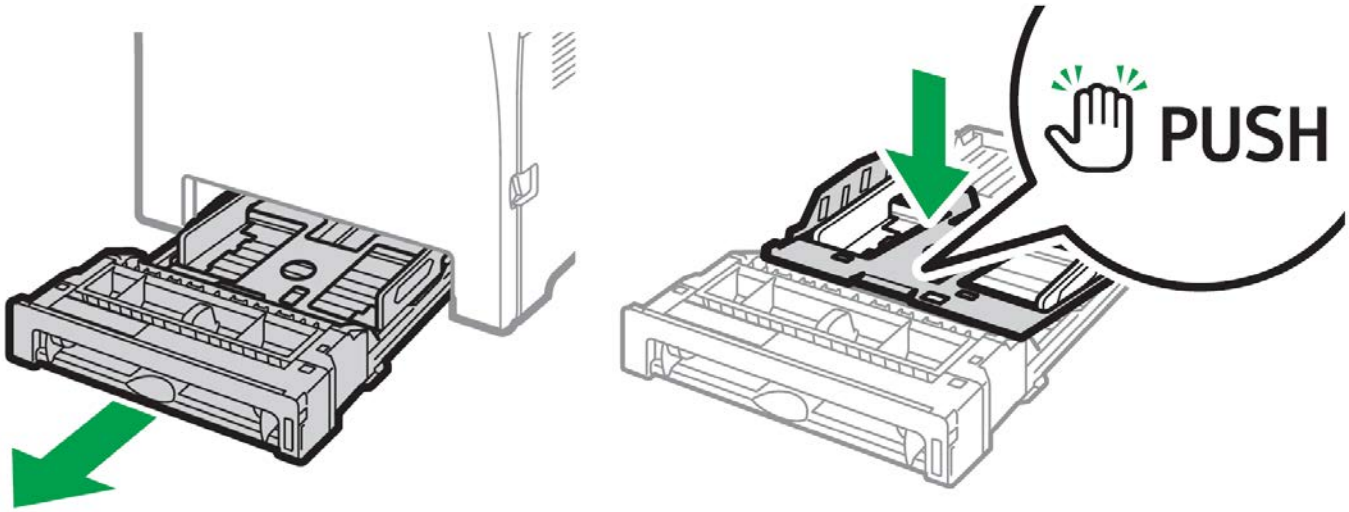

- Pull out the paper cassette and push down the metal base.
- This tray is referred to as 'Tray 1'.

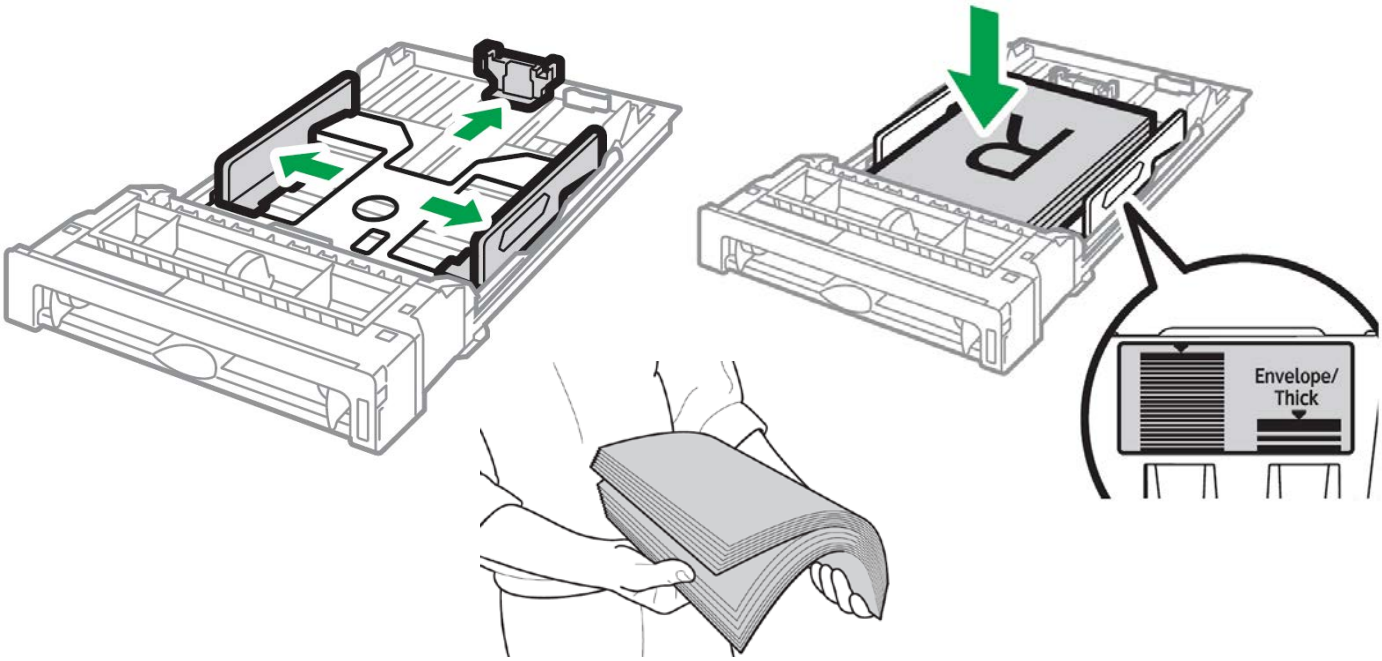

- Squeeze the clips on the paper guides and slide them to match paper size. Do not move the paper guides forcefully. Doing so may damage the tray.
- Media is loaded with the print side facing up. Ensure the paper stack does not exceed the upper limit mark inside the paper tray. Excess stacking can cause paper jams.
- Fan paper or media before loading.

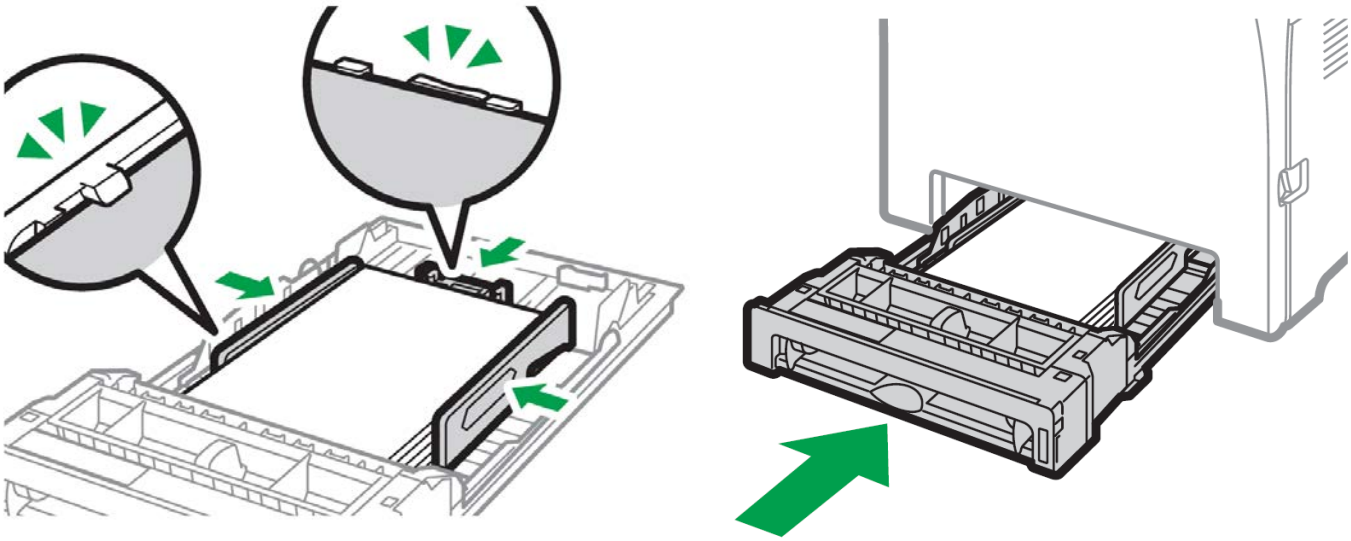

- Ensure the side and back guides are snuggly set against and over the media, or a jam can occur.
- Close the paper tray.

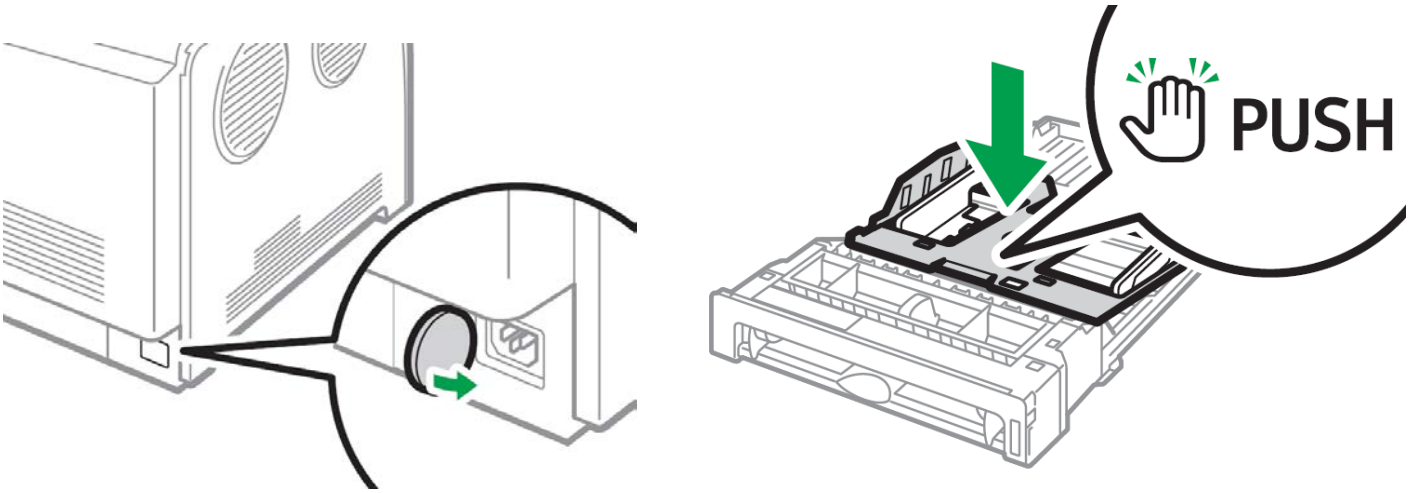

- When loading paper longer than 11” into tray 1, remove the lower rear cover using a coin.
- Remove tray 1 with both hands and place on a flat surface.
- Push the metal plate down until it clicks.

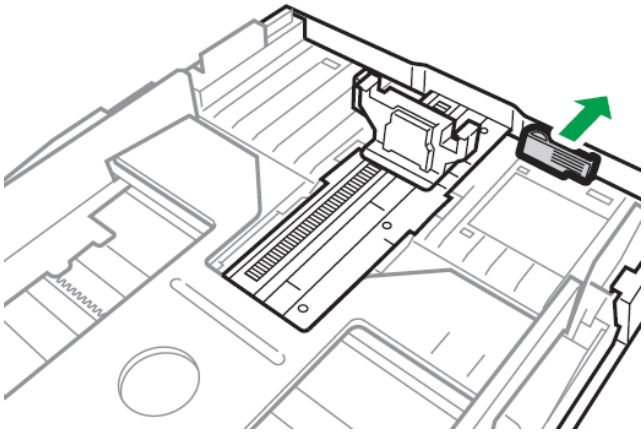

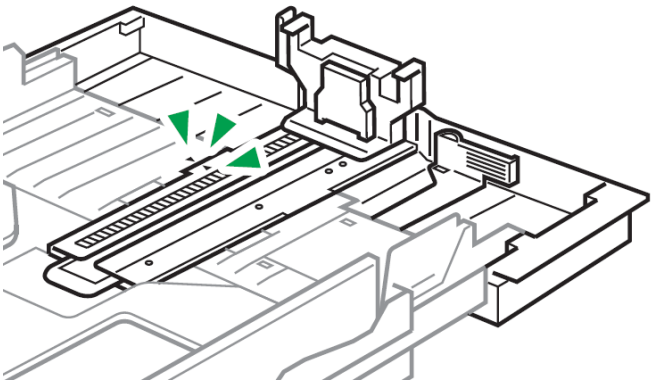

- Pinch the extender, and then pull out the extender until it clicks into place to accommodate lengths up to 14” long.
- After extension, check that the arrows on the extender and tray are aligned.
- The tray will protrude out of the back of the printer. This is normal.
- To reinsert the extender, you might have to push it with moderate force.
- Maximum paper length is limited to 14” long. Use of longer papers can lead to jams.

⚠ Remember to also set the side guides in accordance with the width of the paper used.

⚠ NOTE: Do not extend this tray when loading A4 or letter size paper. Otherwise, a paper jam may occur.

Bypass Tray Operation

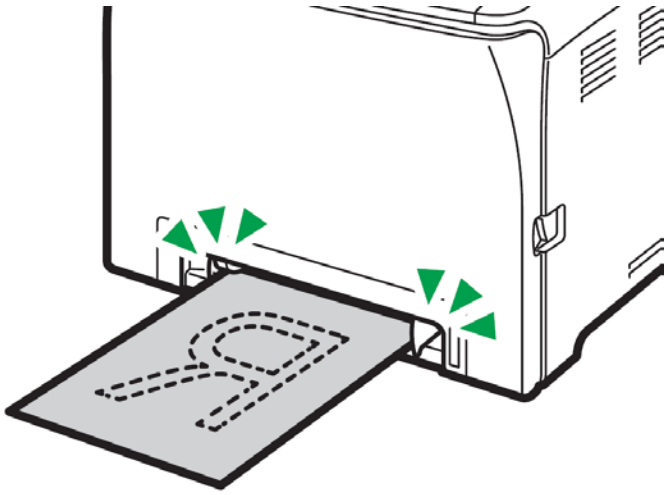

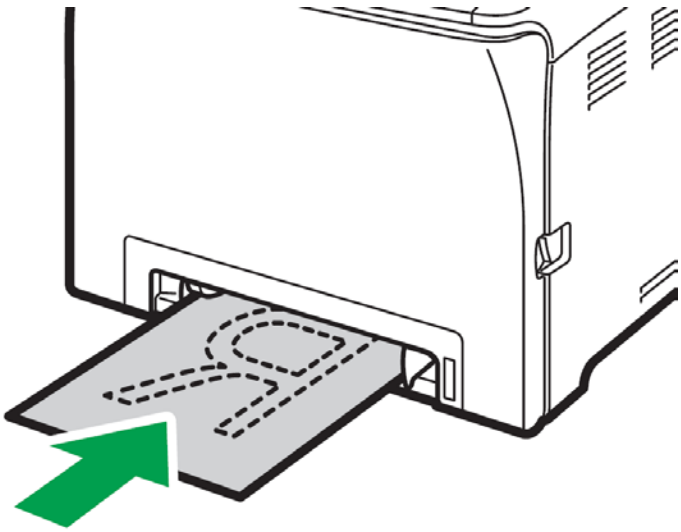

- To use the bypass tray, load paper with the print side down and in the short-edge feed direction.

⚠ You cannot load paper into the bypass tray while the machine is in Energy Saver mode.

- Adjust the paper guides to the paper size. Support the paper with both hands, and insert it carefully until it stops.
- The printer the tray will 'engage' the paper by pulling it in about ½ inch.
- Curled paper may jam. Straighten curled paper before loading.
- Duplex printing is not possible.
- Tray 1 is unavailable if paper is loaded in the bypass tray.

- Pull up the retainer as shown below to prevent A4- or Letter-size prints from falling off.

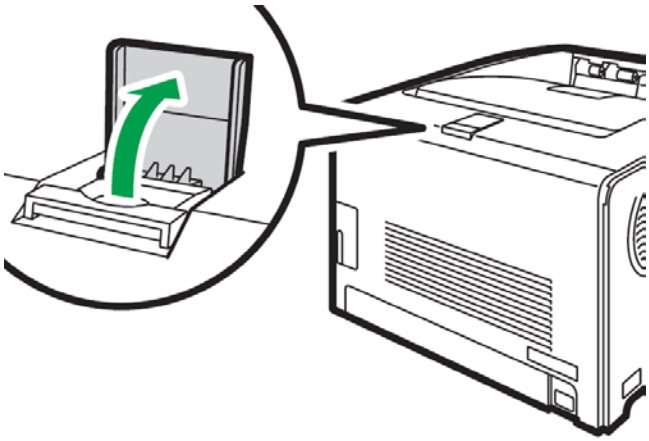

- Pull up the retainer as shown below to prevent Legal-size prints from falling off.

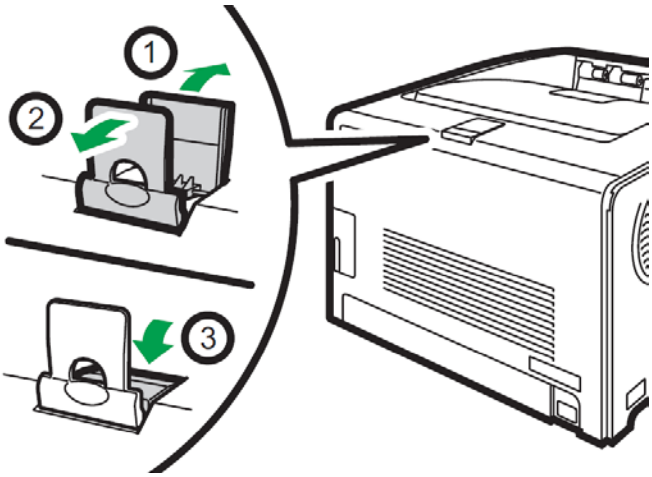

Cable Connections

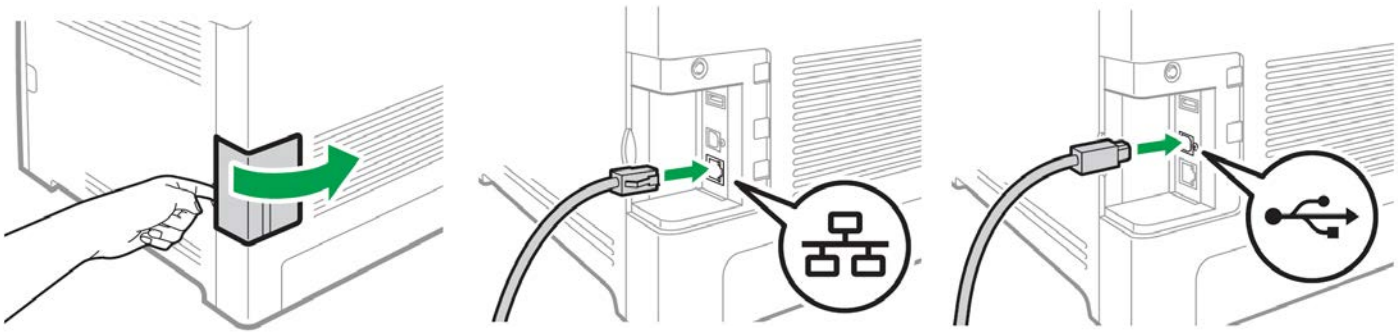

- Open the side panel to reveal the communication ports.
- Insert either the USB or Network cable, depending on how you wish the RIP to communicate with the printer.
- NEVER use both ports at the same time.

⚠ If you are connecting via Wi-Fi, it is not necessary to connect either the USB or Network cable.

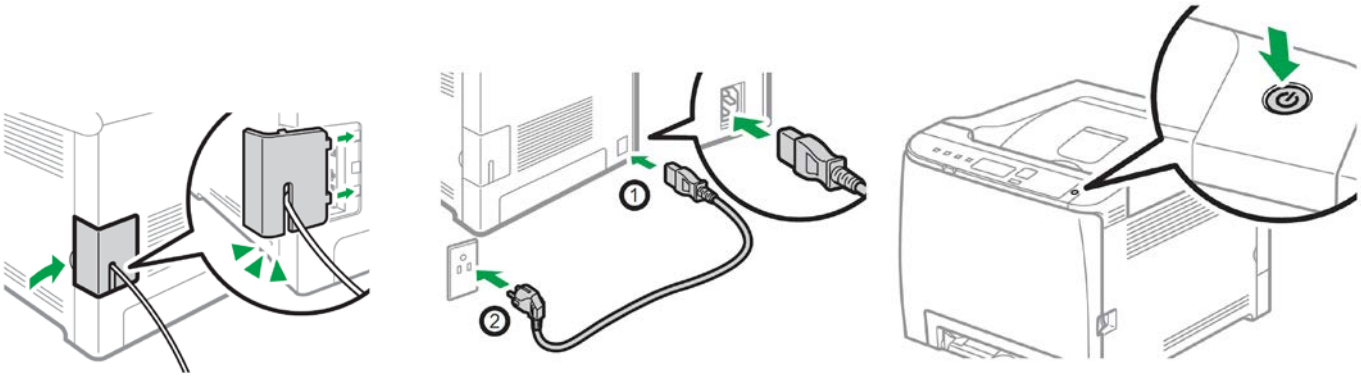

- Feed the cable through the cover and reinstall
- Insert power cord and power on the unit

Wireless Setup

Easy Setup Using the Wi-Fi Setup Wizard

- From the control panel of this printer, you can also configure the wireless LAN settings for the machine.
- A router (access point) is necessary to set up a wireless connection.

- The SSID and Encryption key for the router (access point) may be printed on a label affixed to the router (access point). For details about the SSID and Encryption key, refer to the router (access point) manual.

Confirm the SSID and Encryption key, and write them down on the blank space as shown below.

SSID: _____

Encryption key: _____

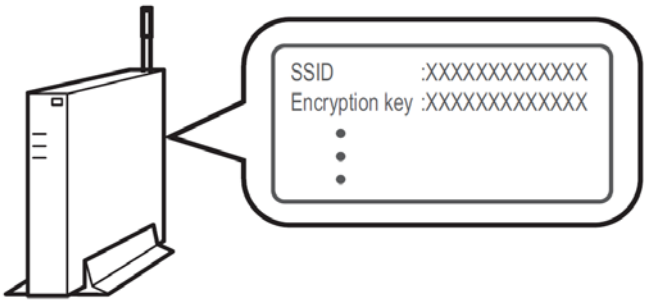

Configuring Settings Using the Printer Control Panel

⚠ **NOTE: Make sure the Ethernet cable is not connected to the machine.**

1. Check that the router (access point) is working correctly.
2. Press the [Menu] key.

3. Using the up/down keys, select [Network Settings] > [Wireless (Wi-Fi)], and then press the [OK] key.

⚠ If an admin password is required, use 'admin'.

4. Press the up/down keys to select [Enable], and then press the [OK] key.
5. Press the [Menu] key to return to the Initial screen.
6. Reboot the printer.
7. Press the [Menu] key, then use the up/down keys to select [Wi-Fi Setup Wizard] > [Wireless (Wi-Fi)], and then press the [OK] key.

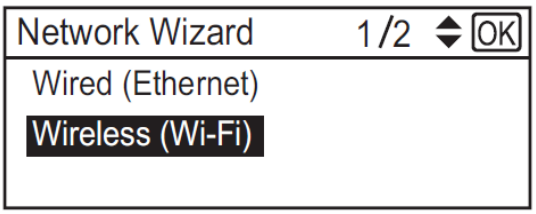

8. Press the up/down keys to select SSID of the router (access point) from the searched SSID list, and then press the [OK] key.

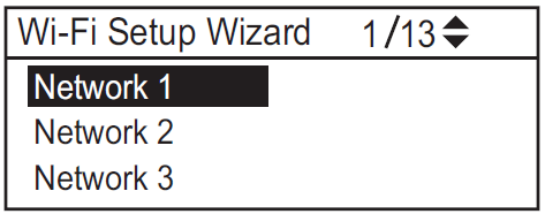

9. Using the up/down keys, select the authentication method, and then press the [OK] key.

⚠ **NOTE: The next steps differ depending on the authentication method that you have selected. Proceed to Step 17 of either section A or B.**

Section A - Connecting to devices using the WPA2-PSK or Mix Mode WPA2/WPA authentication

10. Enter the encryption key (Passphrase) using the up/down keys, and then press the [OK] key.

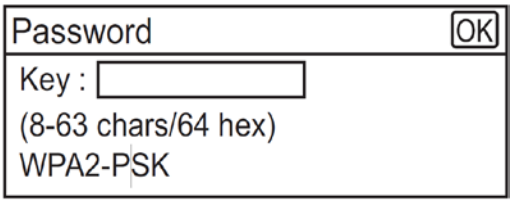

As the passphrase, you can enter either 8 to 63 ASCII characters (0x20-0x7e) or 64 hexadecimal digits (0-9, A-F, a-f).

- To go to the next characters, press the [OK] key.
- Press the [Escape] key to clear all characters.

11. After connecting to the network, the Wi-Fi screen is displayed.
12. Using the up/down keys, select [Wi-Fi Status], and then press the [OK] key.
    - When "Connected" is displayed, the connection has been established.
    - If "Disconnected" is displayed, the connection has not been established. Start again from the beginning.

Section B - Connecting to the devices using the Open System or Shared Key authentication

13. Using the up/down keys, select the encryption method, and then press the [OK] key.

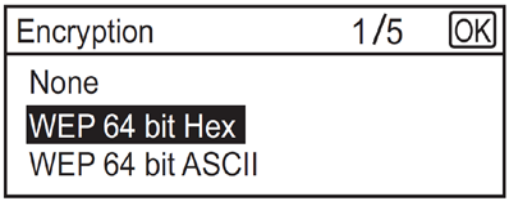

- The max number of characters that can be entered in the encryption key field depends on the encryption method settings.
- Do not select [None] except in special circumstances. If selected, the security system will not work.

14. Enter the encryption key using the up/down keys, and then press the [OK] key.

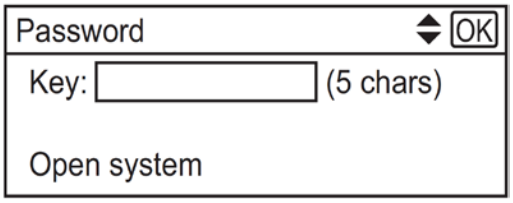

- To go to the next characters, press the [OK] key.
- Press the [Back] key to clear all character.

15. Enter the ID using the up/down keys, and then press the [OK] key.

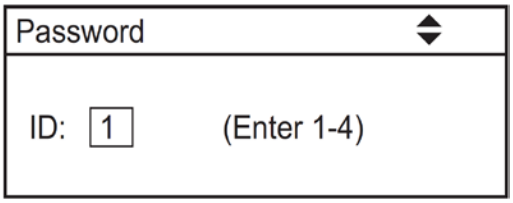

- The ID is used for identifying the encryption key. You can register four encryption keys (ID 1 to 4).

20. Enter password, then press the [OK] key.
    - After connecting to the network, the Wi-Fi screen is displayed.
21. Using the up/down keys, select [Wi-Fi Status], and then press the [OK] key.
    - When "Connected" is displayed, the connection has been established.
    - If "Disconnected" is displayed, the connection has not been established. Start again from the beginning.

Easy Setup Using the WPS Button

⚠ **NOTE: Make sure the Ethernet cable is not connected to the machine.**

1. Follow Steps 1 – 6 to enable wireless functionality.
2. Press the [Menu] key.
4. Using the up/down keys, select [Network Setting], and then press the [OK] key.
5. Using the up/down keys, select [Wireless (Wi-Fi)], and then press the [OK] key.
6. Using the up/down keys, select [WPS], and then press the [OK] key.
7. Using the up/down keys, select [PBC], and then press the [OK] key.
8. Using the left/right keys, select [Yes], and then press the [OK] key. "Connecting..." appears, and the machine starts to connect in PBC method.
9. Press the WPS button on the router (access point) within two minutes.

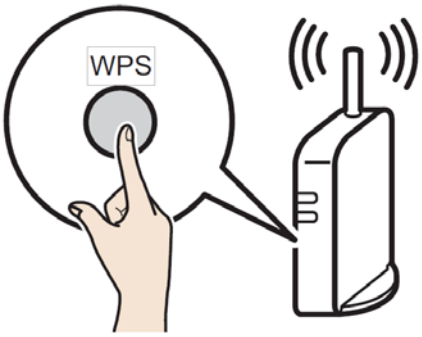

10. Check the result. If connection has succeeded, press the [OK] key and then the [Menu] key to return to the initial screen. If connection has failed, Press the [OK] key to return to the screen displayed in Step 5. Check the configuration for the router (access point), then try the connection again.

11. Configuring the Wi-Fi settings is complete.

12. Once complete, follow the steps for 'Network Setup' beginning on page 12, but choose 'Wireless Connection' as the connection type.

Setting a static IP

1) Press the **Menu** button to the left of the LED screen.

2) Using the arrow keys to the right of the LED screen, select **Network Settings > IPv4 Configuration > IP Address.**

3) Use the arrow keys to set the IP address. You can set the subnet mask and default gateway under the same menu. Your IP address will differ than the example below.

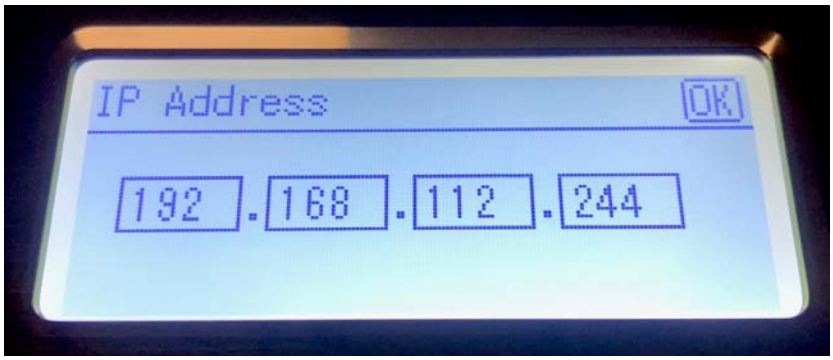

Wi-Fi Direct Setup

⚠ **Use this method to connect your PC <u>directly</u> to the printer wirelessly, without the use of an existing network. The printer will establish its own internal IP address independent of any network that may already exist.**

1. Disconnect the printer from any existing networks and/or remove the network cable from the back of the machine

2. Disconnect your PC from any existing networks and/or remove the network cable from the network.

3. Press the [Wi-Fi Direct] key.

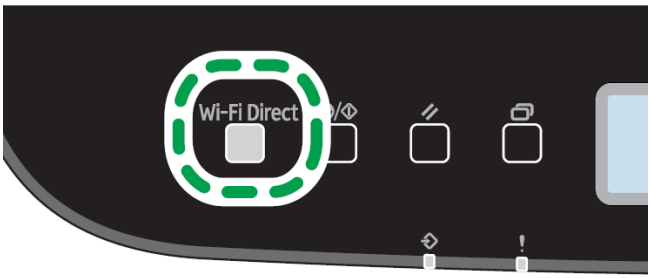

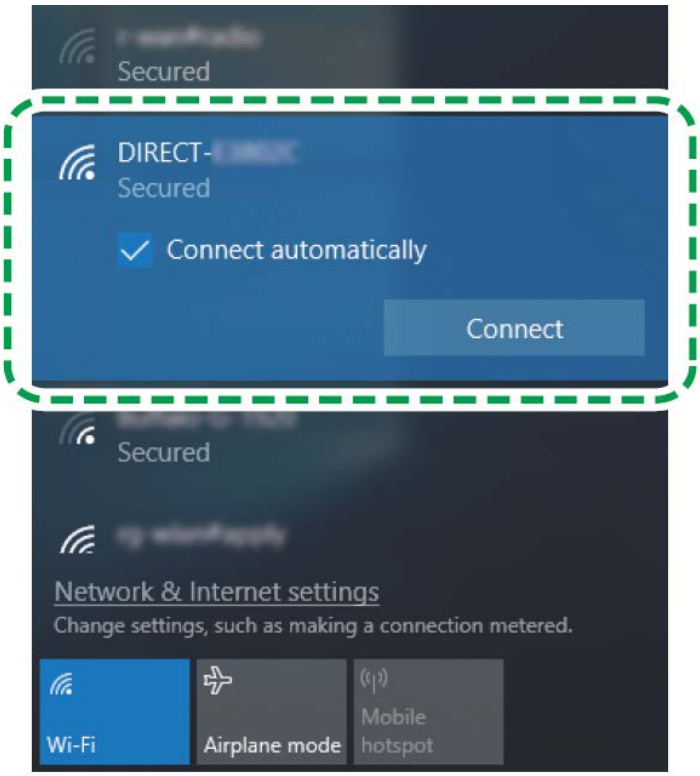

4. On your PC, browse for available networks and select the SSID of the printer identifying itself as (DIRECT-XXXXXX), and then click [Connect].

5. Enter the encryption key ‘admin123’ to connect.

6. Confirm the status of the selected SSID is ‘Connected’.

IColor ProRIP Essentials Software Introduction

IColor ProRIP Essentials is a RIP (Raster Image Processor) software designed for White Toner Laser Transfer Printers. This lightweight and powerful RIP software was designed from the ground up by UNINET and allows users to process images for high-quality output to various printers. It supports multiple file formats and offers advanced features such as color management, spot color replacement, and channel separations. With a user-friendly interface and intuitive workflow, IColor ProRIP Essentials provides powerful functionality where you need it without an overcomplicated interface common in one-size-fits-all RIPs.

In this manual, you'll find detailed instructions on how to use our software to its full potential. We'll walk you through the various features and functionalities, providing tips and tricks along the way. Whether you're new to our software or an experienced user, this manual will help you get the most out of your equipment!

Use the IColor ProRIP Essentials software to print white as an overprint or underprint in one pass. The software allows the user to control the spot white channel feature, as well as spot color overprinting and underprinting. No need to create additional graphics with different color configurations – the software does it all – and in one pass.

Print and Transfer onto:
Natural and synthetic fabric (Light and Dark)
Mugs and ceramics
Light, dark and clear labels
Leather
Light and dark paper stock
Glass
Acrylic
Wood
Metal
Window Cling
Banners
And much more!

Create unique items – The possibilities are endless!
T-shirts and sweatshirts
Aprons
Corporate logo shirts
Mouse pads
Sports apparel
Jackets
Tote bags
Tattoos
And much more!

The most important point of the IColor ProRIP Essentials software is that it allows colors to be put down in layers. Regular printer drivers only concern themselves with what the eye sees on the top layer, the RIP allows you to separately control each layer, thus giving you the ability to control not only what you see, but what is behind that top layer (typically the white layer). The IColor ProRIP Essentials software gives you the unique ability to use one machine to print images with white as an underprint or an overprint. You can now print vibrant colors on clear or dark media regardless of the background to which it is applied, where the white is put down first and the colors afterwards.

The IColor ProRIP Essentials 'Color Mapping' feature allows you to control the order in which the toner layers are applied on demand, depending on your application! This patented technology is the only way to achieve white underprint and overprint in one pass with the same printer. The software also allows for color manipulation and removal, rasterization and professional layout tools.

UNINET has created three configurations (listed as 'Toner Config' in the software) to suit any printing project. The user must physically move the toner cartridges in conjunction with selecting the desired toner configuration within the ProRIP Essentials software:

The **CMYK Configuration** is for standard print jobs that do not require a spot color. This configuration assumes that the media being printed on is white. Use for printing on any white or light colored paper, banner media, window cling, Presto! Media and for Dye Sublimation prints. Note that for Dye Sublimation, there is an ICC Profile that can be used when this is selected (accurate or vibrant).

The **Overprint Configuration** is for printing white as an overprint in one pass for reverse printing (typically used for transfer printing). For this configuration, the white and cyan cartridges are placed in the appropriate slot of your IColor printer. This configuration is for textile and hard surface transfer printing, where white is needed as an overprint, applied on top of all the other colors. When the image is pressed to the garment, the transfer sheet is flipped over and the white becomes the underprint. This is especially important where images have half tones and 100% transfer of the image can be problematic, or when there is white in the image that needs to show through on dark colored garments.

The **Underprint Configuration** is for right side printing and allows for printing white as an underprint in one pass (typically used for transparencies, clear labels, dark media or UniNet Aqua Clear paper). This is configured for 'Right Side Printing' where the white is printed first, as an underprint, all in one pass. In this situation, the RIP converts pure K colors to CMY composite black, and puts in white, not only as a background color, but also in the image where white or page white is specified.

White toner performs the following functions:

1) To produce the color white on a dark garment.

2) To fill in the halftones on lighter images so that there is enough toner on the page to fully transfer to your garment or to pull all the B adhesive.

⚠ This second point is the most important one and the reason why you cannot simply use a CMYK printer for transfer printing. Also, this is why you MUST use the color white all the time (assuming your image has some halftones in it). Even when printing on a white garment and there is no white at all in your artwork. This is the biggest misconception with new users.

⚠ Don't make that mistake, always use the white toner cartridge for any type of transfer printing!

You must move your cartridge configuration around whenever you change your Toner Configuration. For *CMYK*, you will replace the White Cartridge with the Black Cartridge in the front slot. For *Underprint*, the White cartridge will be in the back of the machine, and the Cyan cartridge will be in the front. For *Overprint,* the White cartridge will be in the front of the machine, and the Cyan cartridge will be in the back.

When setting your Toner Configuration, ensure that the paper you are using will correlate with that new setting.

IColor ProRIP Essentials Software Installation

- Make sure all other programs are closed and virus software is uninstalled.
  - ⚠ Failure to uninstall virus software can lead to problems with installation and/or use of software.
  - ⚠ If you keep the virus scan software active after installation, you must add ProRIP Essentials to the 'safe programs' list or issues with ProRIP Essentials software can result. Windows Defender is the only program which, to date, has not affected the functionality of the RIP.

The IColor ProRIP Essentials software can be downloaded here: https://www.icolorprint.com/PE

- Double-click the installer to begin the installation.

1) An InstallShield Wizard will pop up. Click 'Next'.

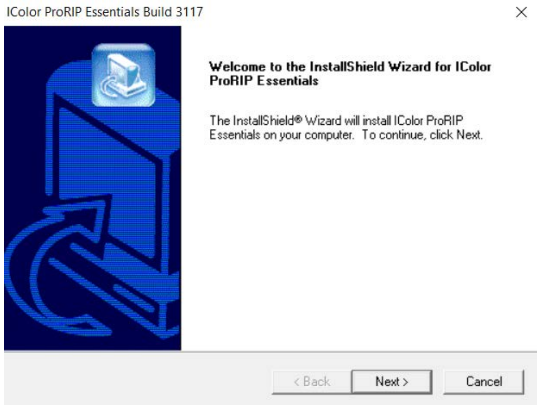

2) Agree to the License Agreement and click 'Next'.

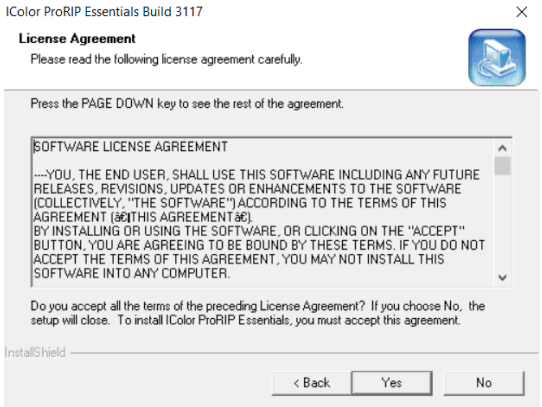

3) Select your printer model from the checklist. If necessary, choose an alternate destination folder, or leave it as default, and click 'Next'.

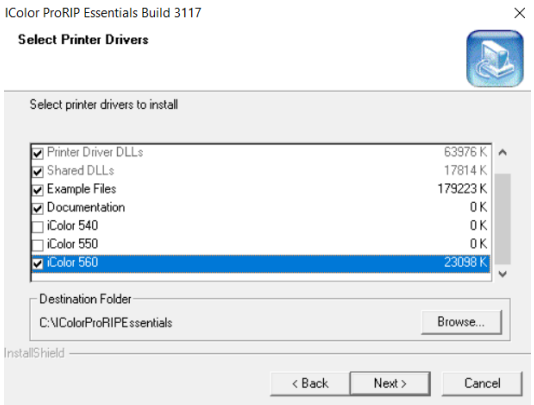

4) Select your Program Folder. You may type a new folder name or select an existing one from the list. Click 'Next'.

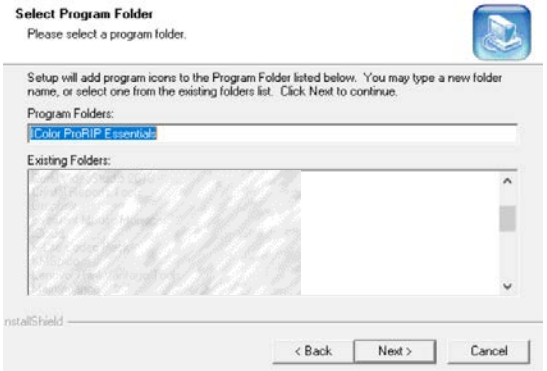

5) Wait for the Setup to complete. This may take several minutes while '100%' is displayed.

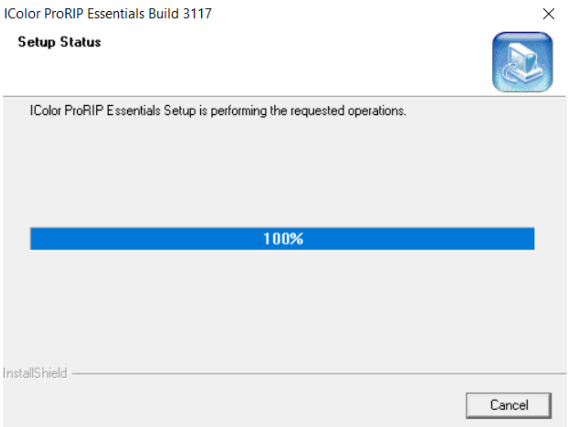

6) Select your serial number nomenclature to ensure the proper driver is loaded. Once selected, click ‘OK’.

(See page 57 on how to locate the serial number of your printer)

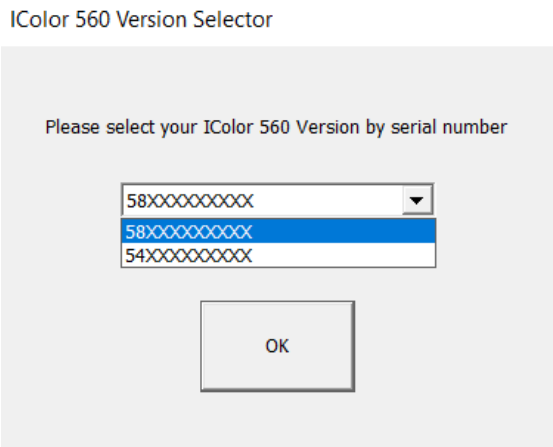

7) Confirm how your printer will be connected (USB or Network).

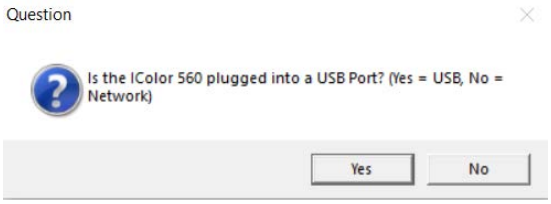

8) The program will find and automatically install the printer driver. If you are updating your software and have already done this step with the previous version, you may close out of this and the installation will complete.

9) You must register your software to continue.

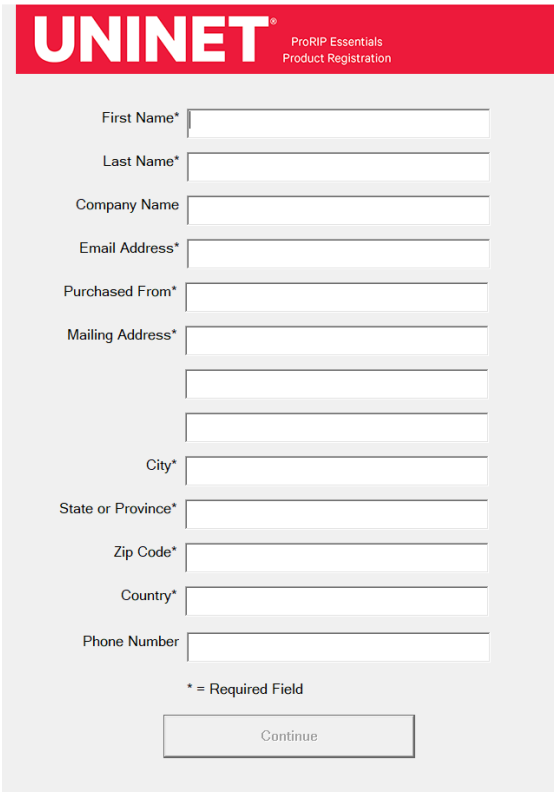

10) If your computer does not have “.NET Framework 3.5”, a Windows Features window may pop up to ask for an installation. Download and install it. Once the download is finished, your installation is complete.

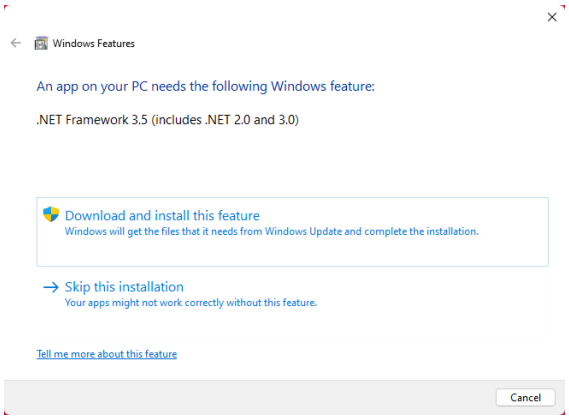

11) If prompted, restart your computer before launching the software for the first time.

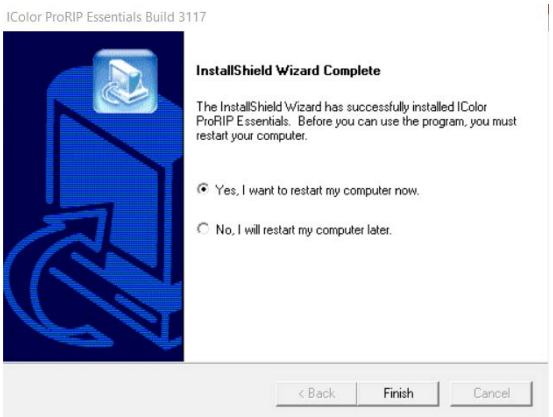

Validating and Activating ProRIP Essentials Software

Validate your software by visiting: https://www.icolorprint.com/get-support/validate-rip-software

⚠ You only need to validate your computer to run the RIP ONCE. Uninstalling the software does NOT remove the validation from your system. You can re-install or upgrade the software as many times as necessary without losing validation as long as it's on the same computer.

⚠ Each Activation Code provides three validations (not three licenses). The Activation Code is a license only to run the RIP on one computer. The extra validations can be issued to provide redundancy in case of accidental validation loss due to hardware failure (hard-disk crashes, etc.) or other unforeseen events.

1) Launch the ProRIP Essentials software by double-clicking the icon. On the pop-up window, select 'Validate'. If you are already running the program in Demo Mode, click Utilities > Software Validation to begin the process.

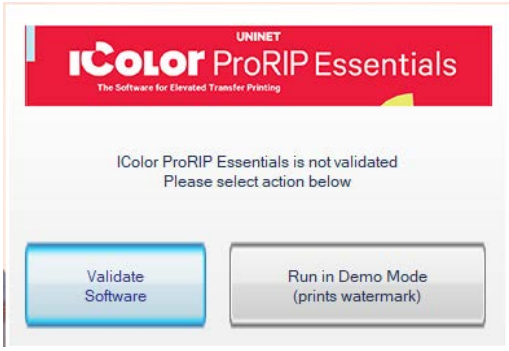

2) A new window will open, and you will find your System ID. Input your Activation Code and copy it along with the System ID into the Validation Portal. Click 'Get Validation Code'.

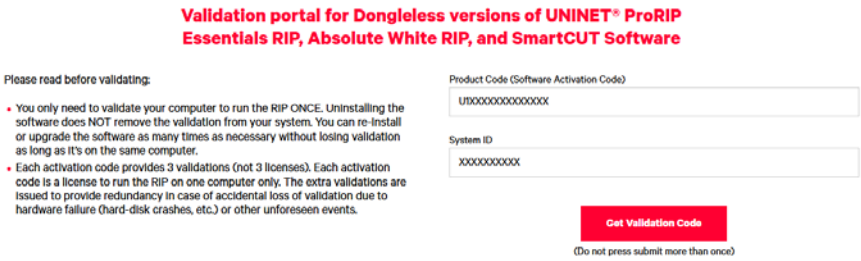

Note: Your software Activation Code is located on the upper right side of your laminated quickstart guide that comes with all new printers.

3) Once you have validated your Activation Code and System ID, the system will show your Validation Code and the Validations remaining. Copy the Validation code from the website to the Software Validation Window and click 'Validate'. Click 'OK'.

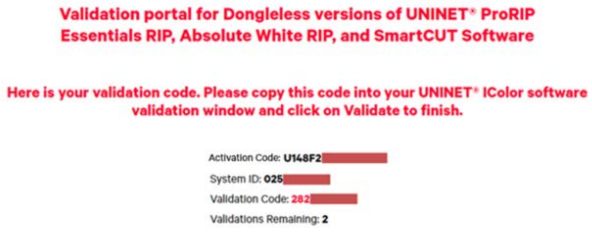

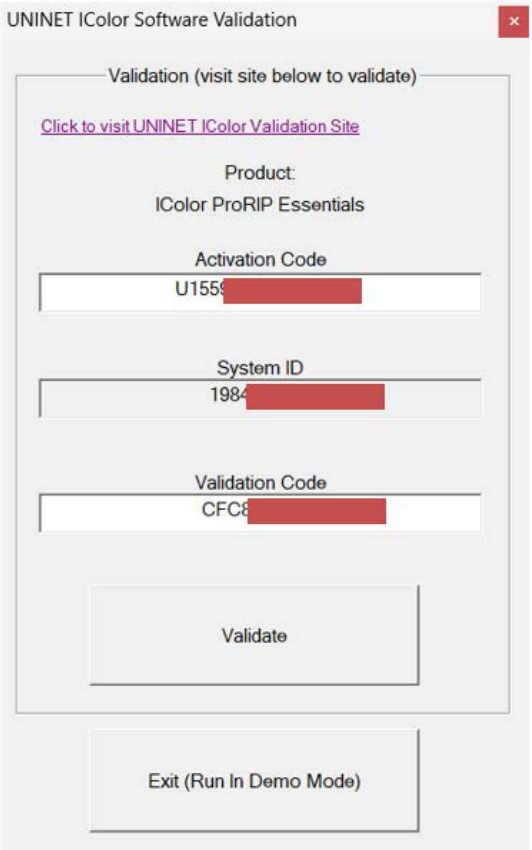

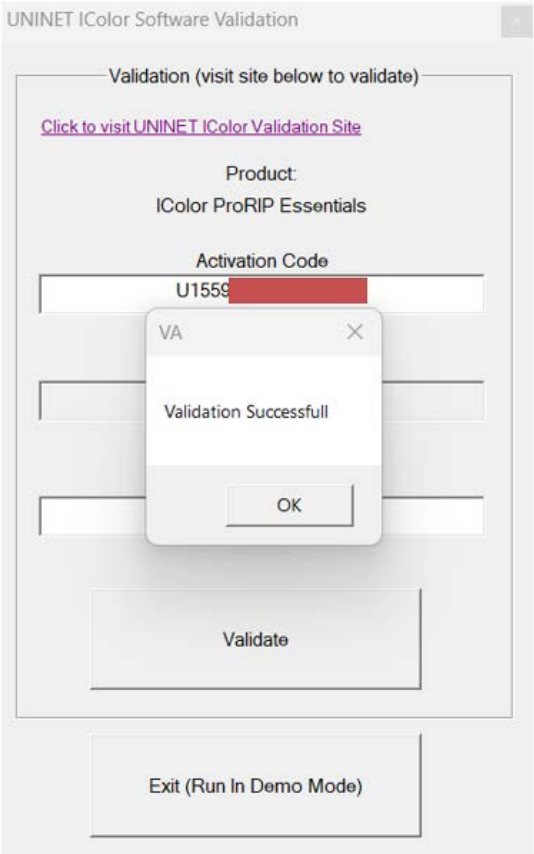

Toolbar

Importing Graphics

To import a graphic, click the 'Import' Button.

Sample files and artwork are all pre-loaded and available for testing purposes. To load other graphics, navigate to where they are stored and click 'open'.

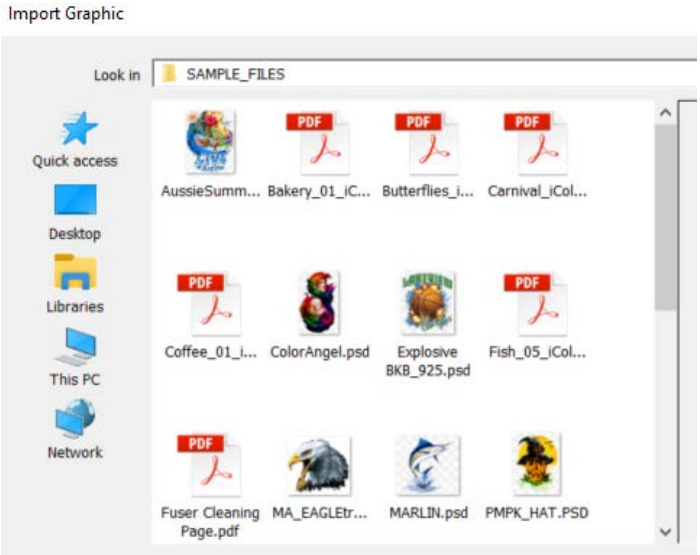

Display Buttons

Display **White Layer**

Display **Color Layer**

Display **Job Preview**

Display **Original File**

Print Settings Tab

Printer Model

This will show you the printer drivers installed on your computer and give you the option to look at and select the printer you will use for the print job.

Print Mode

Each time you select and use a different type of media in the Print Mode section, ProRIP Essentials applies changes on the back end to the correct color profile, amount of toner, fuser settings, and more to ensure your resulting print will be of the highest quality.

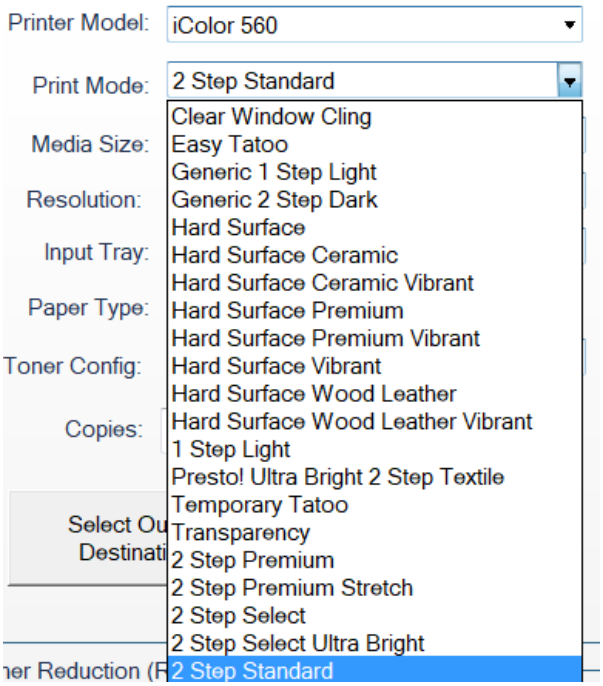

Media Size

Select the media size you are working with. If you are running an A4 media, make sure that it is selected in this option.

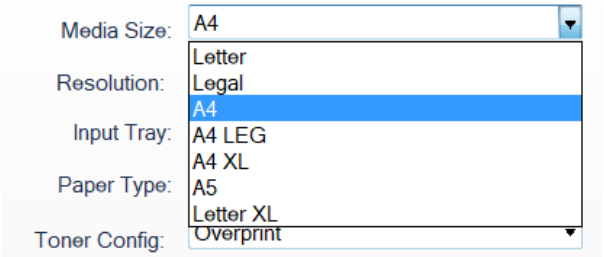

Resolution

For print jobs with small and fine details that need to be used on small materials, you can use 600 x 600 to get the best quality, but 300 x 300 is perfect for most T-shirt designs.

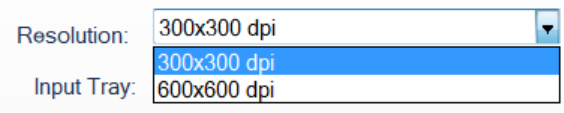

Input Tray

The RIP has been preconfigured to use the proper input tray depending on the media used. You may override the default tray settings if necessary by selecting the preferred tray for the job.

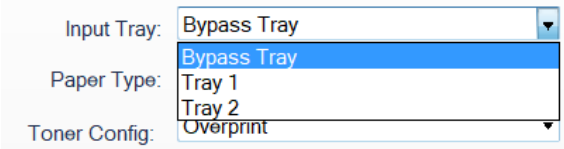

Paper Type

The RIP has been preconfigured to automatically update the paper type settings depending on the media used. You may override the default print settings if necessary, but doing so may cause undesirable results if using certified IColor media or paper.

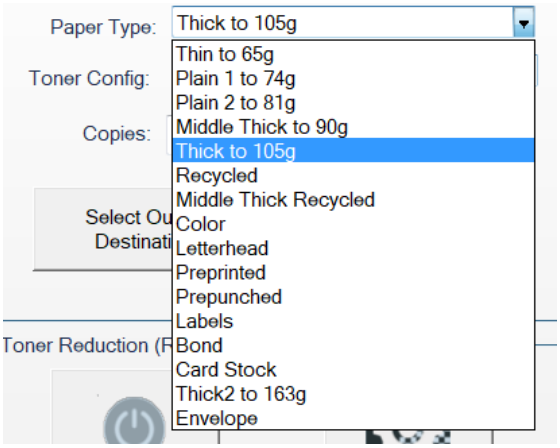

Toner Config

Choose between CMYK printing, overprint or underprint, depending on the project. Cartridge configurations and explanations are detailed on page 22.

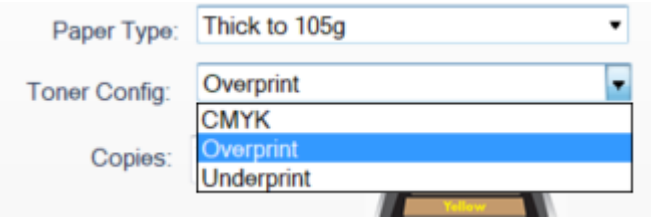

Toner Reduction (Rasterization)

The **Toner Reduction feature** is for rasterizing the artwork to increase the negative space within your graphic. This will allow for better stretching, a longer wash cycle and a softer hand. You can change the *hole size, shape, and frequency* by clicking the **Configure** icon. You may also select 'point and click' rasterization to control the aspects of the graphic you wish to rasterize.

For partial rasterization, tick the **Vary Hole Size with the Transparency** box. This will only apply holes to the outer edge of the graphic.

If you make changes in the configuration, click on the Preview icon to see those changes.

Once you have applied your desired configuration, click the 'power' icon to apply your rasterization, then save and exit.

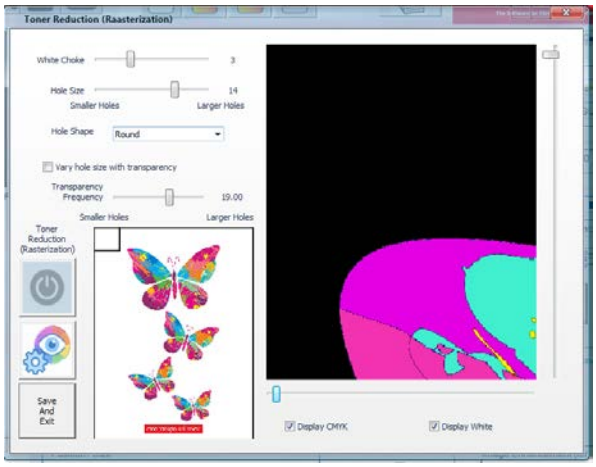

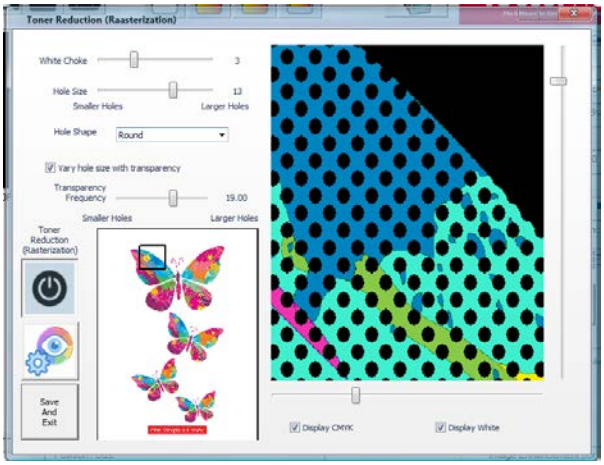

Select Output Destination

When your graphic is ready, you can select your output destination by choosing your connected printer in the *Output Destination*. You can also select a path instead by selecting **File,** in the *Output Destination* and browsing your desired folder in the Output Path.

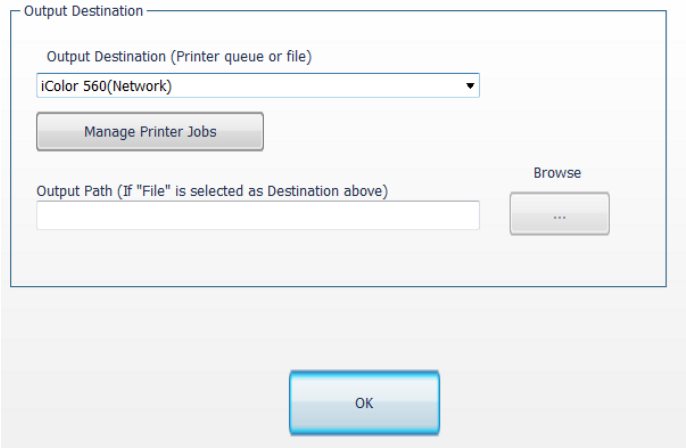

You can also access your Print Job Manager by clicking Manage Printer Jobs. This will give you control over your Print Queue.

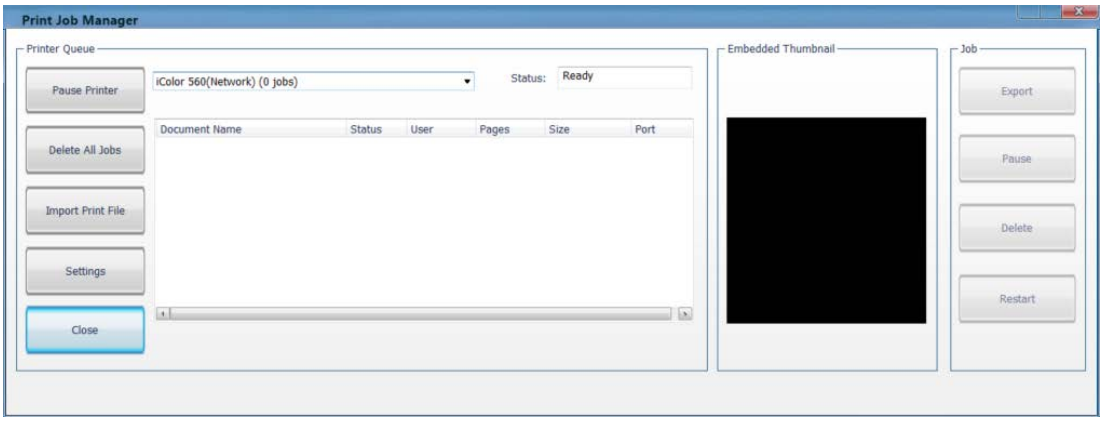

Sizes Tab

You must choose the correct size to match the paper being used. You can add a custom size if you can't find the right paper size.

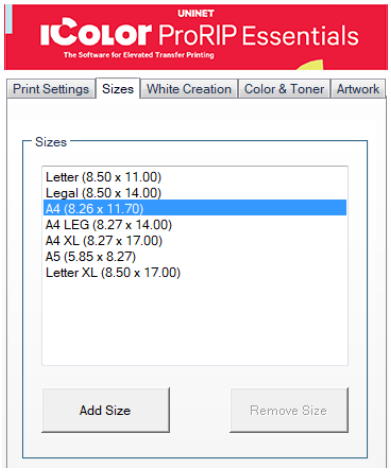

White Creation Tab

This will allow you to generate a white layer. This will be useful if you print on a CMYK printer and want it to run for a second pass and print white on top of it.

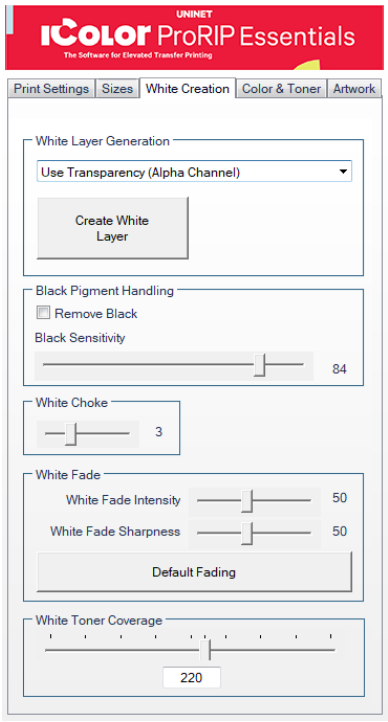

Remove Black

Printing an image with black on a dark garment using a two-step transfer will not look good or convincing. The Remove Black feature removes most of the area considered leaning towards solid black without getting any transition areas caught up in it. The lower the setting, the lighter the colors you'll remove.

White Choke | White Fade

Use this when you notice white fringing around your graphics and you want to bring in the white so you don't have any white outlining. This setting is best left on default.

White Toner Coverage

This feature will allow you to control the amount of white toner applied to different areas of an image or design, depending on the desired effect or result. For two-step transfers, more toner could make your print more brittle and less stretchable.

Color & Toner Tab

Color Profile

This allows you to select the appropriate color profile for your particular printing device and media, which helps to ensure accurate color reproduction and consistency across different print jobs. This can be adjusted based on the type of printer, toner, and media being used, as well as the desired output quality and color accuracy. By default, the *UNINET_DEFAULT_RGB ICC* is selected.

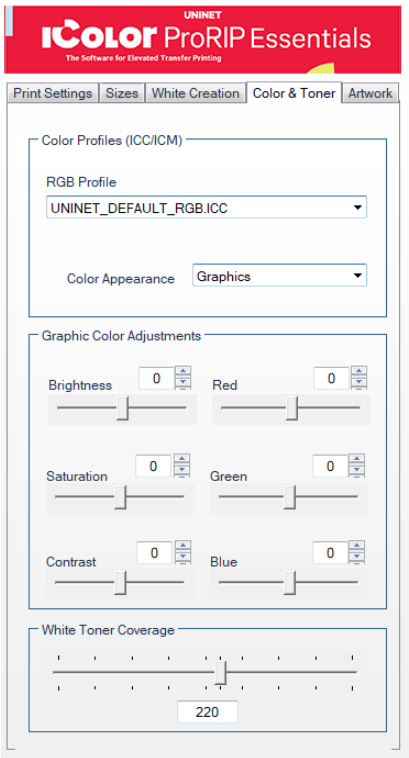

Graphic Color Adjustments

You can make basic color adjustments to your graphic with these sliders, such as Brightness, Saturation, and Contrast. You can also adjust the Reds, Greens, and Blues to your liking.

White Toner Coverage

This feature will allow you to control the amount of white toner applied to different areas of an image or design, depending on the desired effect or result. For two-step transfers, more toner could make your print more brittle and less stretchable.

Alignment Buttons

The buttons are used to position and reposition your artwork in the workspace.

Center Graphic Horizontally

Center Graphic Vertically

Rotate Counter Clockwise 90 Degrees

Rotate Clockwise 90 Degrees

Rotate Specified Amount

Flip Vertically

Remove Blank Space

Mirror / Un-Mirror

Substrate Color (For Display Only)

Fill Platen

Mouse Right-Click

These are shortcuts you can access by right-clicking your mouse.

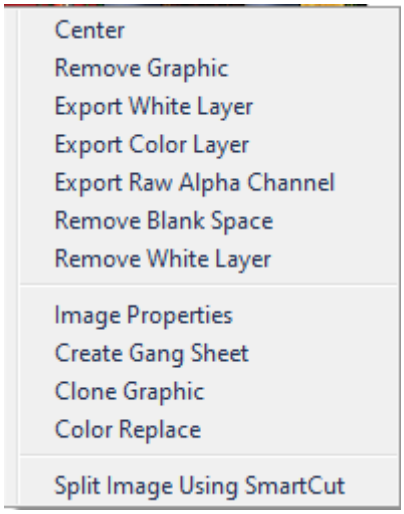

Center

Aligns your graphic to the center of the platen.

Remove Graphic

Deletes the graphic in your platen.

Export White Layer

Allows you to export your White Layer only on a desired path/destination.

Export Color Layer

Allows you to export your Color Layer only on a desired path/destination.

Export Raw Alpha Channel

Allows you to export your Raw Alpha Channel only on a desired path/destination.

Remove Blank Space

This will automatically detect and remove any excess blank space or borders on your graphic.

Image Properties

This allows you to view the path of your imported graphic and edit its properties, such as the dimension, resolution, scale, and position on the platen.

Create Gang Sheet

This function allows you to combine multiple print jobs or images onto a single sheet/page. This is particularly useful for printing applications requiring multiple copies of an image/graphic, such as labels, stickers, or decals.

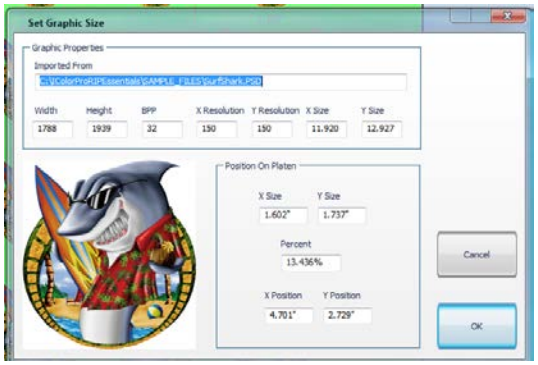

Clone Graphic

This creates a single copy of your selected graphic on the platen.

Color Replace

This function allows you to replace a specific color of an image with another color. See page 19.

Split Image using SmartCut

This feature is particularly useful for printing applications where the final output is larger than the size of the printer or media, and the image or graphic must be printed in sections or tiles. See page 21.

Select and Replace Colors

Right-clicking on your artwork preview will display a menu. The 'Color Replace' option allows you to change a specific color in your artwork.

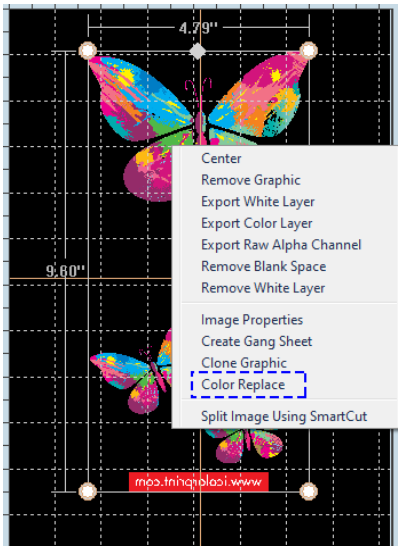

To begin, click 'Add Replacement', and you will be prompted to choose the method to select the color you want to replace. After that, you will be next prompted for your new color. Click 'OK' to save.

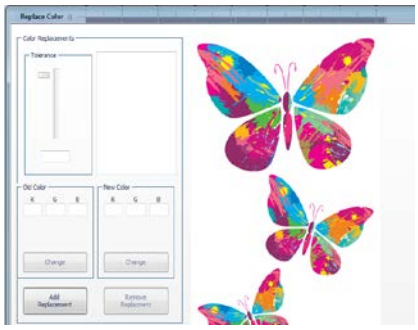

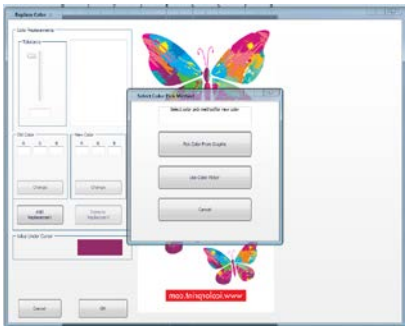

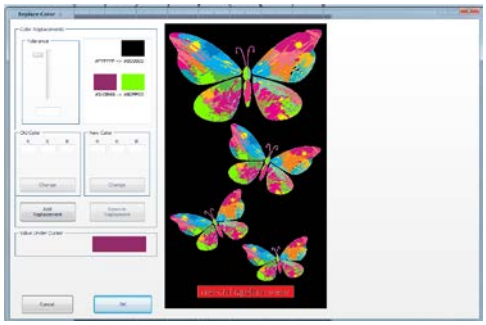

Step and Repeat

This allows you to duplicate your graphic and create a pattern. This is also used to create gang sheets. The number of duplicates will depend on the distance between each graphic as well as the size.

To begin, resize your image to your desired size and position it on the top left part of the platen. Click **Image** on the Toolbar and select **Step and Repeat.** A window will pop up, and you will be prompted to input your desired separation/gap between each graphic copy.

The RIP software will automatically space out each duplicate that will fit the platen.

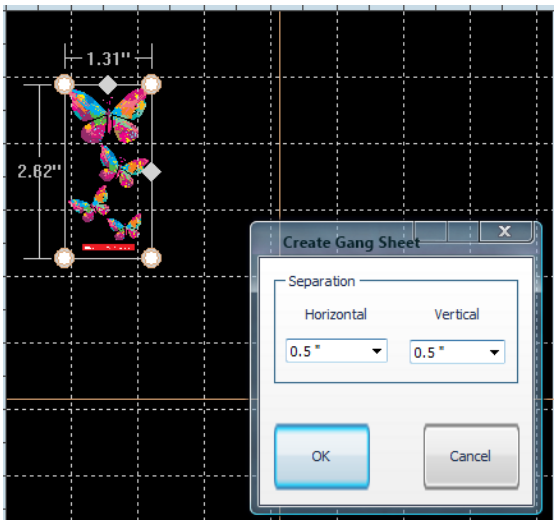

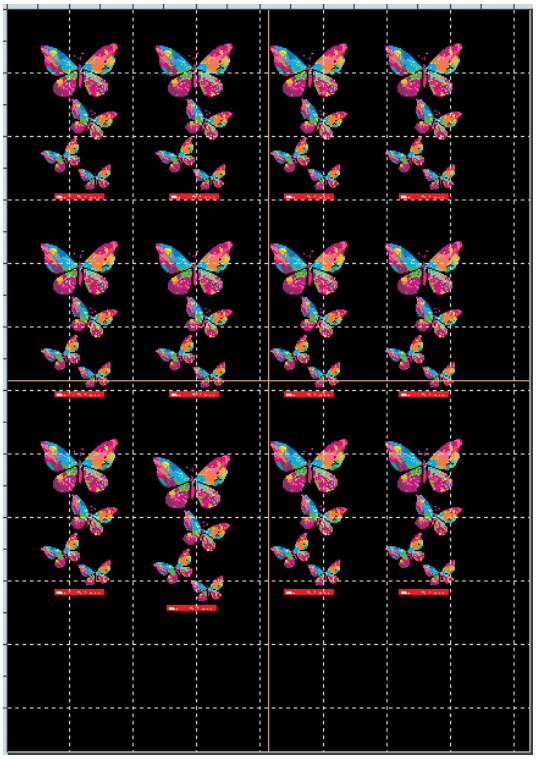

Sending a Job to the Printer

Ensure the correct printer models is selected under 'Print Settings', as well as the rest of the sections. When ready, click the Print icon to output your job in the printer.

To see video instructions for IColor™ ProRIP Essentials, visit
https://www.icolorprint.com/video#video-64551ff4bc032b8a9d581ae1

WARNINGS

⚠ Your IColor™ 560 printer has been preconfigured from the factory for optimal performance. UNINET strongly advises that you do **not** change any settings on the printer itself (through the control panel), unless specifically directed by a certified UNINET technician. Otherwise, poor or inconsistent results could arise.

⚠ Avoid setting custom administrator passwords or changing security settings on the printer control panel, as hardware changes cannot be overridden or changed by UNINET if the password is forgotten and could lead to possible irrevocable, catastrophic modifications that may result in rendering your printer inoperable. This is not covered by your warranty.

⚠ All print commands are dictated and transmitted solely by the IColor™ ProRIP Essentials software. Any required updates or modification would occur in the software and not hardware. It is always best not make any changes to preset data (hardware of software) unless specifically directed by a certified UNINET technician.

⚠ To ensure trouble free operation of the IColor™ ProRIP Essentials software, please uninstall any third party virus scan software before proceeding. Virus scan software often views RIP software as an invasive program and invariably deletes important files which can cause issues in the quality of the print or the overall operation of the software. Windows Defender is the only known virus scan software which does not conflict with the RIP.

Toner Cartridge Replacement Guide

Because the IColor 560 features cartridge remapping to achieve a white underprint or overprint, it is important that you follow these rules when determining the cartridge order inside the machine:

OVERPRINT & CMYK Configuration Supplies Replacement Guide Typically used for reverse print applications such as garment decoration

Printer Display Reads:	Replace with:
Cyan low/out/empty	Cyan (Back of Printer)
Magenta low/out/empty	Magenta
Yellow low/out/empty	Yellow
Black low/out/empty	White/Clear/Black (check which cartridge is installed) (Front of Printer)

UNDERPRINT & CMYK Configuration Supplies Replacement Guide Typically used for right side reading application such as printing on dark or clear media

Printer Display Reads:	Replace with:
Cyan low/out/empty	White/Clear (check which cartridge is installed) (Back of Printer)
Magenta low/out/empty	Magenta
Yellow low/out/empty	Yellow
Black low/out/empty	Cyan (Front of Printer)

It is recommended that you power down your printer before moving cartridges to prevent electrostatic damage.

The black, white or clear cartridges can never be installed at the same time. Only one of these 3 cartridges can be installed at any one time.

Use Genuine UNINET IColor Consumables

Only use genuine UNINET IColor consumables. The use of incompatible supplies (toner, drums, transfer belts, fusers) will cause damage to your printer not covered by your warranty.

Printing with Fluorescent Colors

Instantly transform your IColor printer into a fluorescent printer where the printed images produced will glow brightly under UV light. The upgrade kit consists of 3 toner cartridges (CMY) and are shipped in 3 separate boxes. Simply remove and store the standard CMY toner cartridges and swap with the fluorescent kit to instantly print with UV sensitive toner while using the standard black cartridge in place. The white cartridge that shipped with your IColor 560 printer can also be used if a white overprint is required.

Operating on the same application principles as standard toner that ships with your machine, you can print and/or press onto virtually any surface using the appropriate transfer media – or print directly onto paper, transparencies and label stock. Be sure to design your graphics with bright colors – avoid dark or black colors (unless specifically wanted), as those will not fluoresce well and may not look desirable as a final product. Most fluorescent images will be placed on a black or dark colored garment, so black would not be suggested in these cases anyway.

Specific installation instructions can be found at www.icolorprint.com/support

Printing with Dye Sublimation Toner

Instantly transform your IColor printer into a dye sublimation printer. The upgrade kit consists of 4 toner cartridges (CMYK) and are shipped in 4 separate boxes. Simply remove and store the standard cartridges and swap with the dye sublimation kit to instantly print and sublimate on coated materials.

Operating on the same application principles as standard ink sublimation systems, you must press onto white 100% polyester or sublimation coated materials for best results. 50/50 cotton poly blends may also be used for a lighter, vintage look. There is no white overprint option with dye sublimation, only CMYK prints are possible.

The IColor Dye Sublimation Upgrade Kit has several unique advantages suited for a production environment:

- Vastly faster print speeds: 25 pages per ***minute*** vs 34 pages per ***hour*** for ink (photo mode).
- No clogged heads resulting from non-use. Toner based systems do not have this maintenance issue.
- Longer expiration period.
- Much higher page yield: 7,000 pages standard toner vs 350 pages for starter ink.
- Use of regular copy paper instead of special dye sublimation paper.

Specific installation instructions can be found at www.icolorprint.com/support

Ask your dealer about upgrading to security, gold, silver and clear toner options as well!

UNINET

IColor SmartCUT

Oversize Image Transfer Solution

Why use IColor SmartCUT?

SmartCUT allows owners of smaller width printers to gain the benefits of tabloid or larger sized printers.

SmartCUT is a user centric tool that is a key component to expanding the size constraints of popular print methods, especially as it relates to transfer printing commonly associated with garment decoration. This ground breaking application turns your letter / A4 sized printer into a tabloid 'plus' capable machine, allowing for the splitting and splicing of one graphic across two or more printed transfer sheets without seeing the seam!

Use any oversized graphic along with a transparent transfer sheet, and the software will split it in half along the most logical path. You can choose to have it split along dark or light areas, depending on the color garment you will be pressing onto. With this software, you can make large designs that are not possible with even the most expensive of printing systems because you can split up your graphic onto as many transfer sheets as you want.

SmartCUT can be used in tandem with any RIP software package and printer. It was designed from the ground up with ease of use as a paramount consideration. Most functions are automated to allow you to focus on finding the best starting point to split each job. Final results can be used on virtually any printer. White toner printers highly recommended.

SmartCUT supports many file types such as PNG, JPG, BMP, GIF and TIFF files.

The program works as an integral part of a decorating system, where the split pages are printed onto IColor Standard or Select transparent transfer media. The sheets are then lined up visually on the substrate through the transparent sheet.

Print and press onto plus size garments such as 2X, 3X, 4X. The ability to print designs that properly fill out these large sizes creates the opportunity for high value garments that can fetch a premium price. A very high percentage of designs used are virtually imperceptible by even those who know that a seam exists.

SmartCUT is more than just 'splitting software' – it's a RIP enhancement tool!

New features include:

- The 'Selective Masking Tool' allows you to point and click to rasterize or distress elements of your design based on color or shape.
- IColor ProRIP software integration for ease of use.
- The 'Real Preview' tool which applies the white adhesive behind the image (digitally) and then applies the image it to the color and texture of a shirt. The result is a much more realistic preview of how your image will look once pressed.

Split Image Using SmartCut

SmartCut allows owners of smaller-width printers to print oversized images easily.

To split the graphic, right-click on the image and select Split Image using SmartCut, and a new window will open.

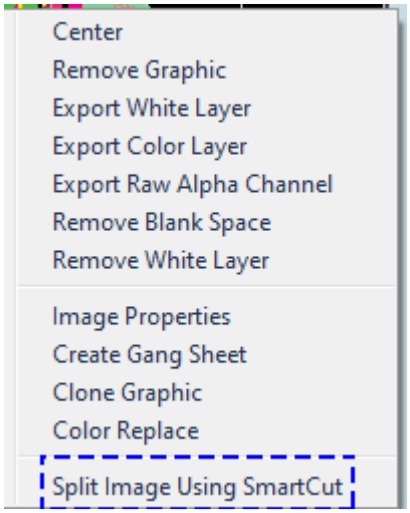

1) The 'Interface' tab controls how the splitting window looks and operates.
   - You may select different backgrounds depending on your preference.
   - 'Show Transparent Areas As' allows you to show transparent areas as either the grey background color or with checkers.
   - 'Color Theme' allows you to change the normally grey background into any color of your choosing. Use this feature to simulate the color of the intended substrate (although the 'Real Preview' option presents a more realistic view of the final product).
   - You can separately choose the background of the intended split window as well as the 'New Composition' window.
   - 'Arrow key increment' will allow you to type a value which will correspond to how far the image(s) are moved for each arrow key strike. The larger the number, the greater the distance images will move.

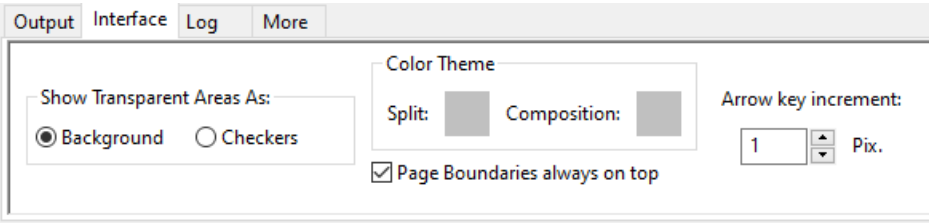

2) Use the '90° rotate' button to change orientation.
   - This may be necessary to find the best way to split your graphic.
   - You can alter the size of the original image as desired under the 'Full Image Size' parameters for the best possible fit on the print sheet sizes.

- This can be done at any point in the process and may be necessary to do when lining up the split windows.
- You can zoom in and out using the tool bar in the upper left corner of the screen at any time.

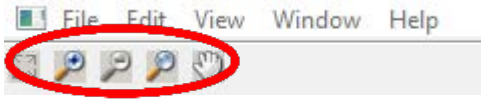

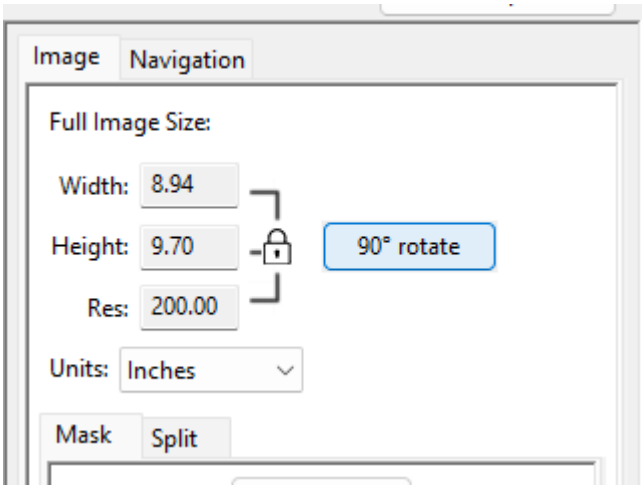

3) Determine the size of the transparent print sheets you wish to print the split images onto.
   - There are several preset media sizes available in the software.
   - You can also create a custom size if desired.
   - Note that a safe area is already built into the margins to help avoid overbleeding.

4) To set the size of the first sheet, click on the 'gear' icon next to the 'First' pink box, then choose the size of the media you wish to use for the first part of the image and click 'OK'.

A pink boundary box/marker will appear over half of the image representing where the first half of the image will print on the media size selected. This can be positioned anywhere by dragging it.

If the image is too large for the box, you can adjust your overall image size to fit by going to the 'Full Image Size' section at the top right of the screen. The aspect ratio will always be locked.

To resize an image, delete the bounding box first by clicking the gear icon again and selecting Delete.

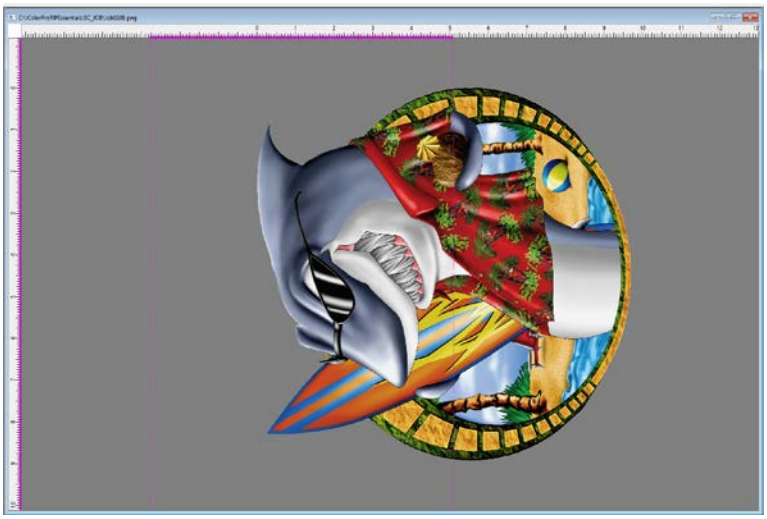

Next, click on the gear icon next to the 'Second' blue box. Select the media size you wish to use for the second part of the image and click 'OK'.

The graphic should safely fit inside the final sheet sizes. The safe margin area is pre-programmed already. Once you have established the page sizes for splitting, drag the split boxes to select the best zone for image splitting.

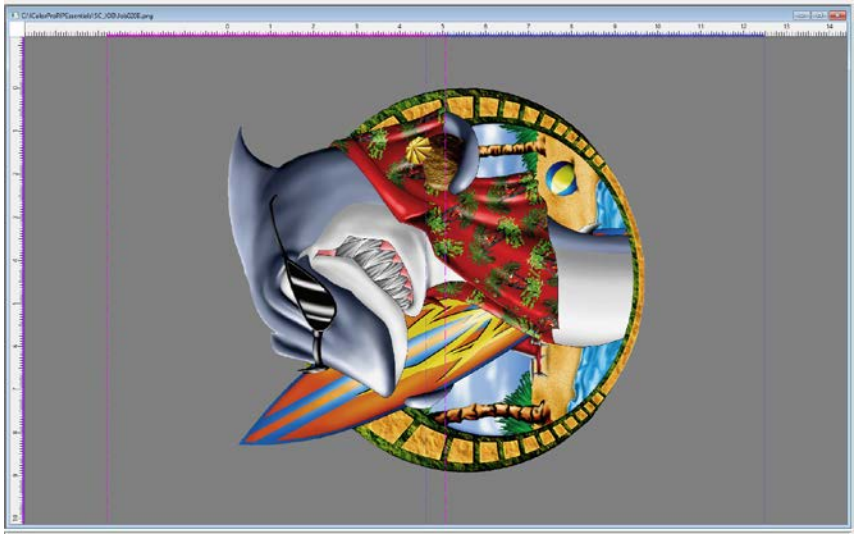

The position of the split zone should be placed in an area where the cut line will be the least noticeable. The width of the cut zone should also be wide enough to follow the natural contours in the image for best results.

Select Smart Split on the right side window to start splitting the image.

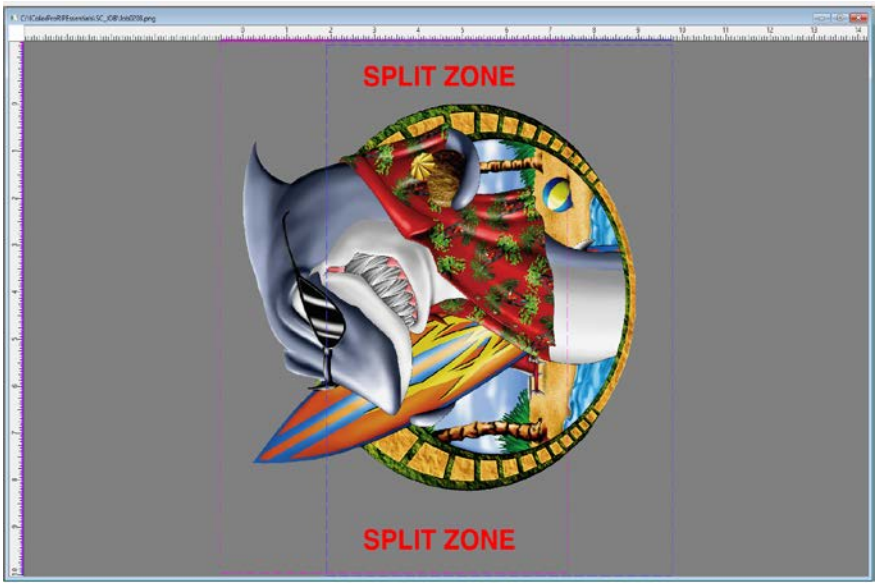

A dialog box will ask where the image will be printed on. The Split Function has a preference to process files through transparent areas as a priority,

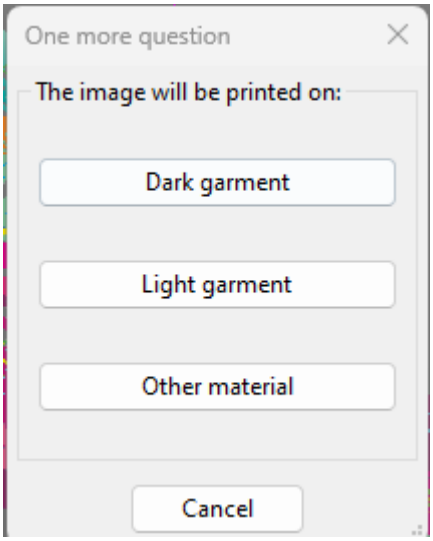

- The Dark Garment option treats black as a transparent color.
- The Light Garment option treats white as a transparent color.
- The Other Material follows edges without regard to color, asking if you are not using any rasterization or masking.

These options allow the user to remove either of these colors after importing into the RIP software with a rasterization masking feature, so the split will be undetectable once pressed.

The process of splitting the image may take a few minutes depending on the complexity of the image and the speed of your computer. You can view the progress of the splitting process in the upper left corner of the screen.

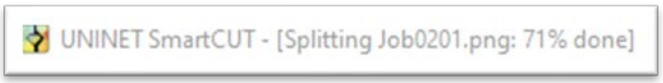

Once your split results are ready, Click 'Save' and the 2 page graphic will be loaded into the RIP.

⚠ The graphic may be centered on the page but DO NOT alter the dimensions of each split image in any way or the graphic won't line up properly when reassembled on your substrate or textile.

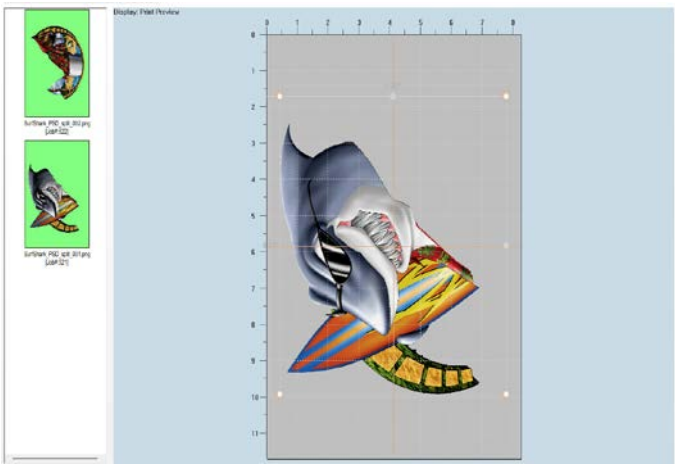

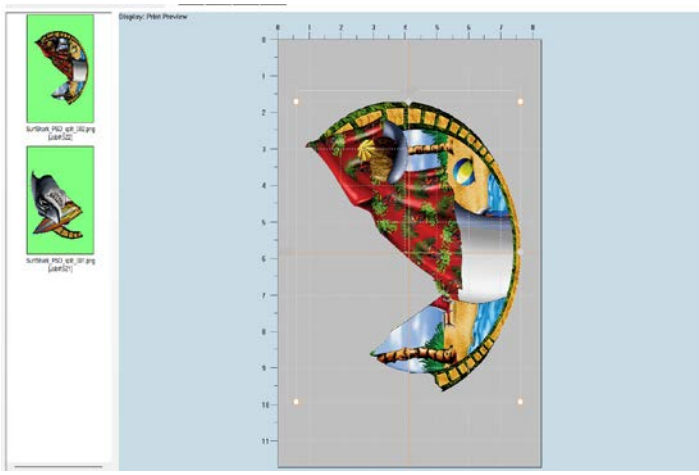

For more in-depth instruction for the IColor SmartCUT software, consult the User Manual located at www.icolorprint.com/support.

Maintaining your Printer

Replacing the Print Cartridges

• Store print cartridge in a cool dark place.
• Actual yield varies depending on image volume and density, number of pages printed, paper type and size, and environmental conditions such as temperature and humidity.
• The manufacturer shall not be responsible for any damage or expense that might result from the use of parts other than genuine parts from the manufacturer with your office products.
• When the toner runs out, pressing the [Stop/Start] key allows you to print a few more pages, but the print quality of those pages may be lower.
• Do not allow paper clips, staples, or other small objects to fall inside the machine.
• Do not expose the print cartridge without its cover to direct sunlight for a long time.
• Do not touch the print cartridge's photo conductor unit or the ID chip on the side of the print cartridge as indicated in the illustration below.

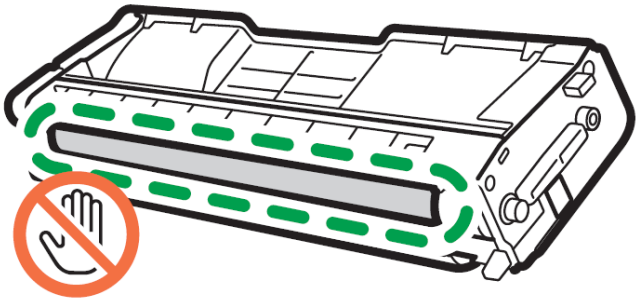

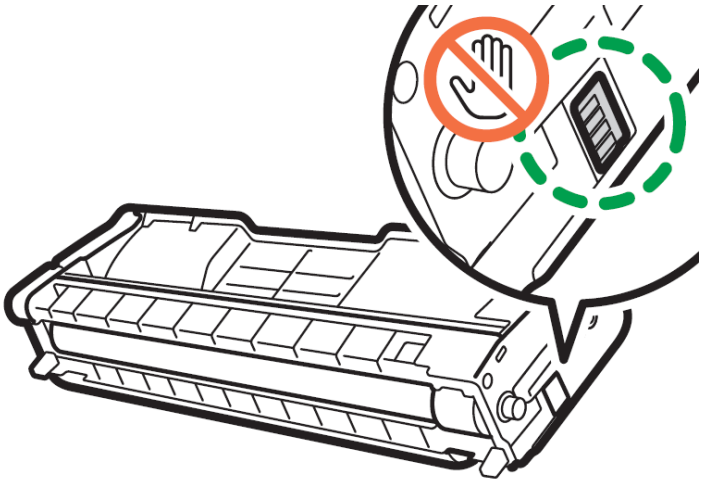

• When removing print cartridges, be careful not to touch the laser scanning unit under the upper cover (the position shown by the arrow in the illustration to the right).
• If cyan, magenta, or yellow toner runs out, you can print in monochrome using just the black toner. Change the color mode setting to Black and White using the machine's driver.
• If black toner runs out, you cannot print at all until the black print cartridge is replaced.

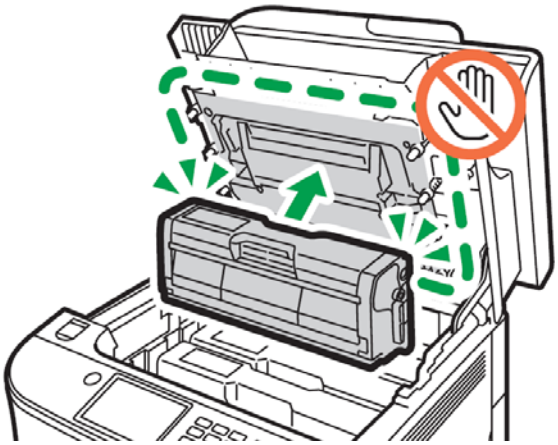

Messages on the screen:

Replace the indicated print cartridge when any of the following messages appear on the screen:
'Replace Toner: (X)' (X indicates the toner color)

Prepare the indicated print cartridge when any of the following messages appear on the screen:
'Replace Required Soon: (X)' (X indicates the toner color)

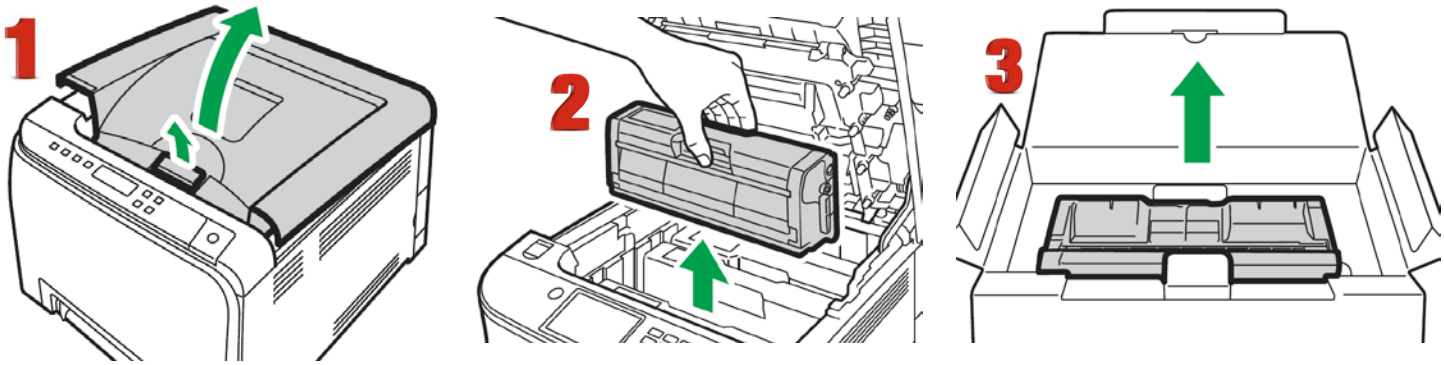

1. Pull up the lever on the top cover, and then carefully raise the top cover.

2. Carefully lift out the print cartridge vertically, holding its center. From the rear, the print cartridges are installed in the order of cyan (C), magenta (M), yellow (Y), and white (W) or black (K).

3. Take the new print cartridge out of the box, and then take it out of the plastic bag.

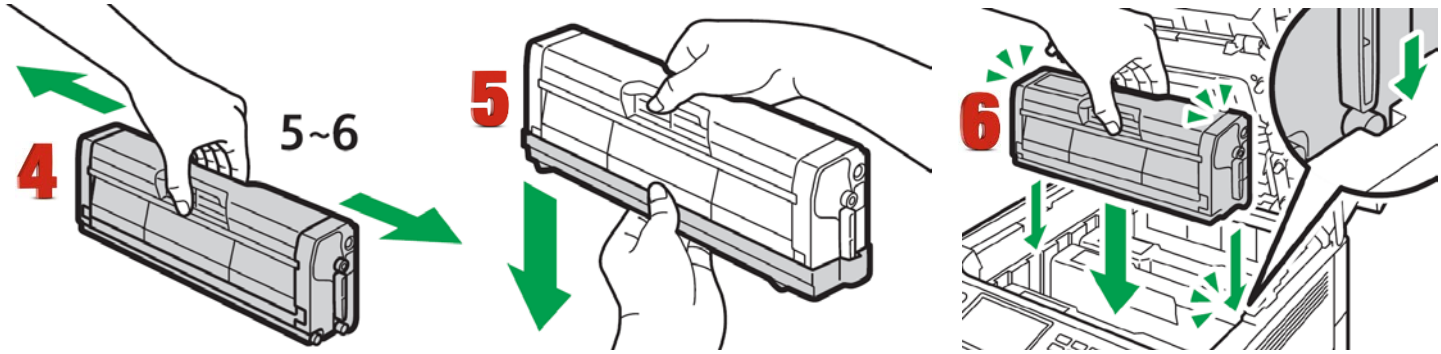

4. Hold the print cartridge and shake it from side to side five or six times. Even distribution of toner within the bottle improves print quality.

5. Remove the protective cover from the print cartridge.

6. Check the toner color and corresponding location, and then carefully insert the print cartridge vertically.

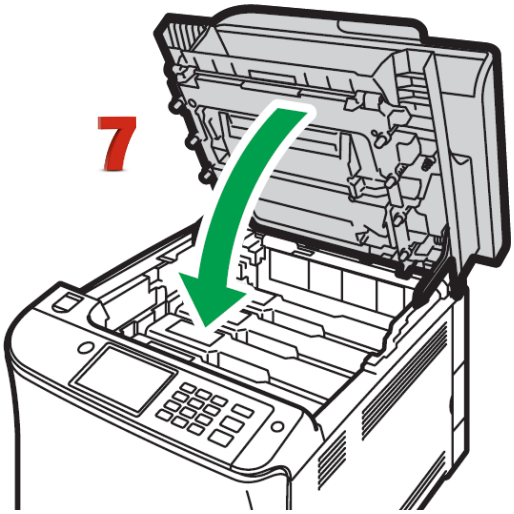

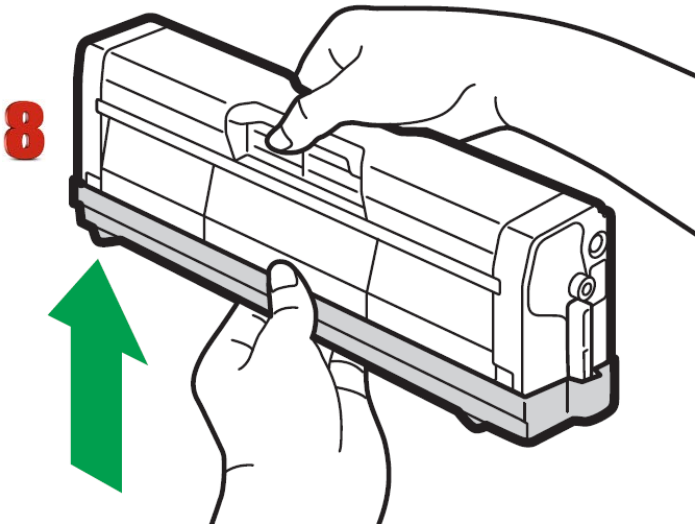

7. Using both hands, hold the center of the top cover and close the cover carefully.

8. Attach the protective cover you removed in Step 5 on the old print cartridge. Then, put the old print cartridge into the bag, and then put it into the box.

Replacing the Waste Toner Bottle

Messages on the screen

- Replace the waste toner bottle when the following message appears on the screen:
  "Replacement Required: Waste Toner Bottle"
- Prepare a waste toner bottle when the following message appears on the screen:
  "Replace Required Soon: Waste Toner Bottle"
- Waste toner bottles cannot be reused.
- When removing the waste toner bottle, make sure not to tilt it.
- Make sure the transfer unit is installed. If the transfer unit is not installed, install it before turning on the power.
- Before removing the waste toner bottle from the machine, spread paper or similar material around the area to keep toner from dirtying your workspace.

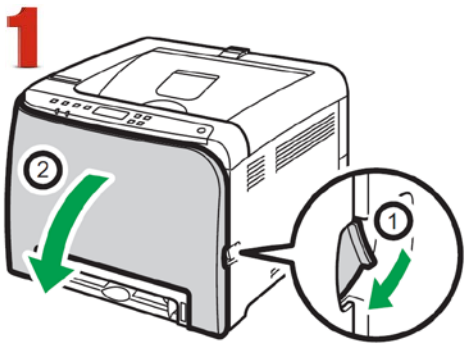

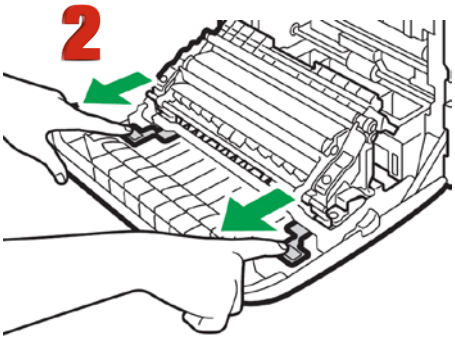

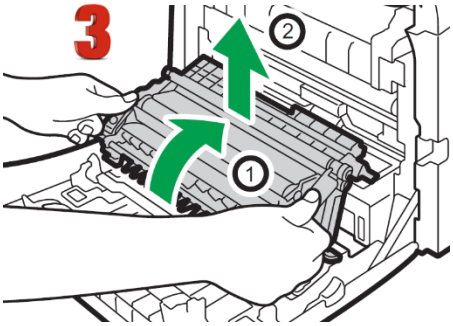

1. Pull the front cover open lever and then carefully lower the front cover.

2. Slide both levers on the front cover forward.

3. Holding the tabs on both ends of the transfer unit, tilt it backwards and lift it up.

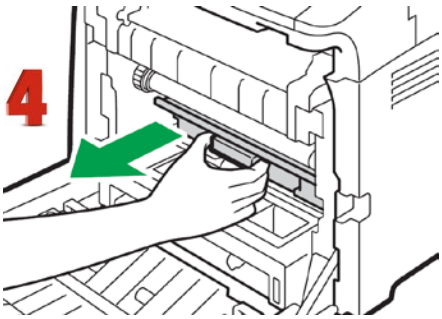

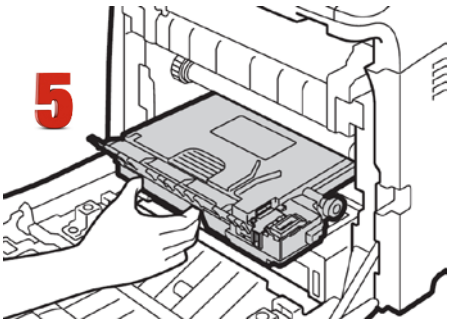

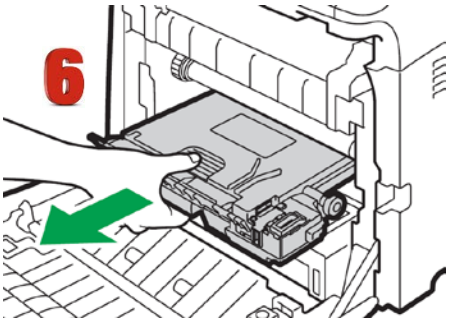

4. Holding the handle at the center of the waste toner bottle, carefully pull it partially out without tilting it.

5. Pull the waste toner bottle halfway out.

6. Holding the bottle firmly, pull it straight out.

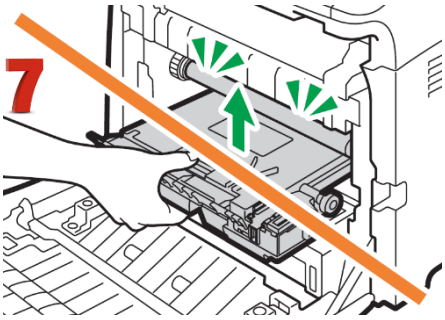

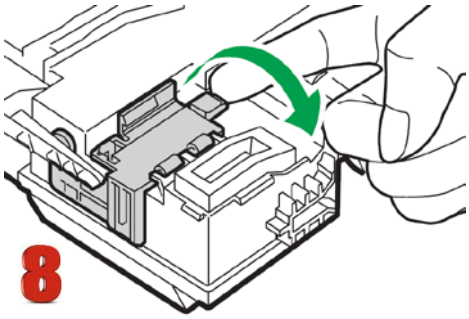

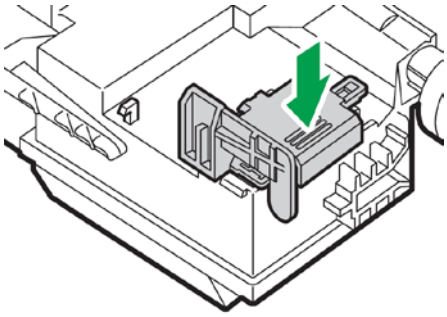

7. To prevent the waste toner bottle from coming into contact with the intermediate transfer unit (the position shown by the arrow in the illustration below), do not lift the bottle while pulling it out.

8. Close the bottle cap.

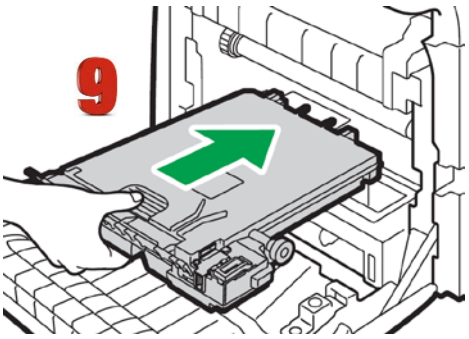

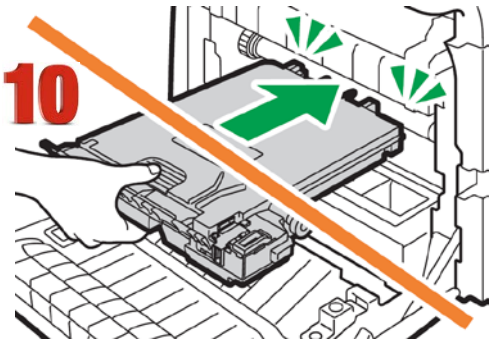

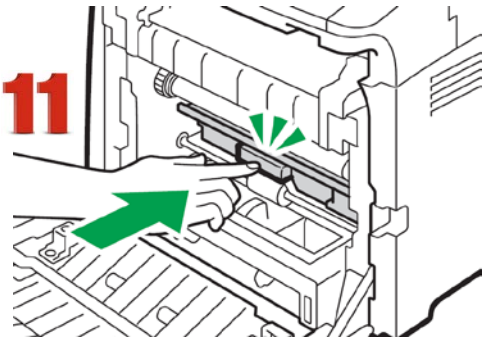

9. Holding the center of the new waste toner bottle, carefully insert it halfway into the machine body. Leave the bottle cap open.

10. To prevent the waste toner bottle from coming into contact with the intermediate transfer unit (the position shown by the arrow in the illustration below), do not lift the bottle while inserting it.

11. Push in the waste toner bottle until it clicks. Pressing the handle at the center, push the bottle all the way in.

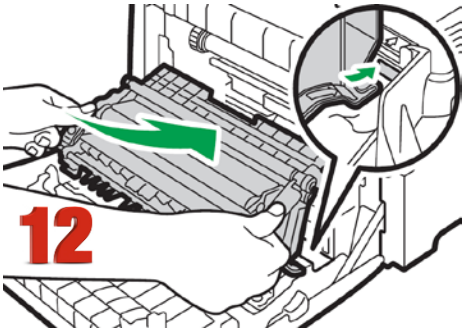

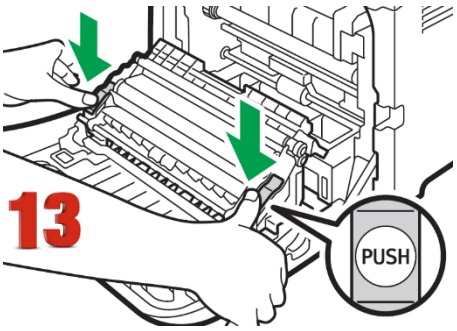

12. Place the transfer unit on the front cover. Slide the transfer unit along the guide rails into the machine.

13. When it stops, push on the PUSH mark until it clicks.

14. Using both hands, carefully push up the front cover until it closes.

15. When closing the front cover, push the upper area of the cover firmly.

Cleaning the Toner Density Sensor and LD Unit Dust Shield

Clean the toner density sensor when the following message appears on the control panel.
"Density Sensor Require Cleaning"

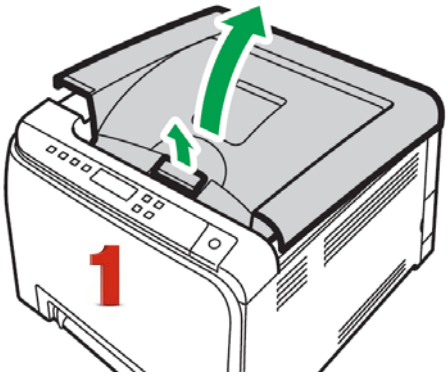

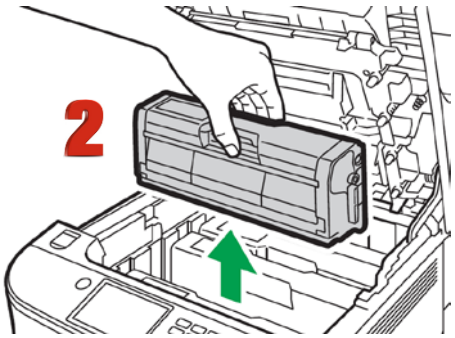

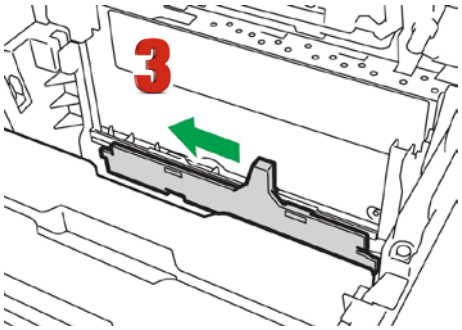

1. Pull up the lever on the top cover, and then carefully raise the top cover.

2. Remove the rearmost print cartridge.

3. Slide the toner density sensor lever once to the left.

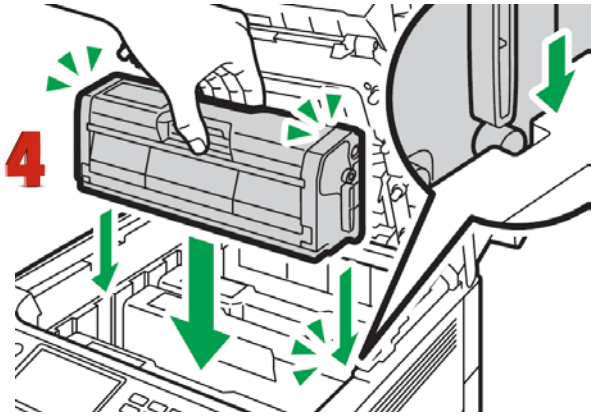

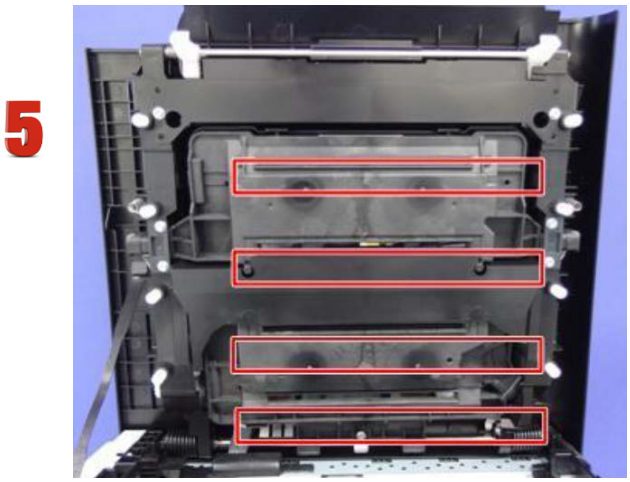

4. Carefully insert the print cartridge removed in Step 2 vertically.

5. Clean each dust shield glass with a soft damp cloth, and then wipe the same area with a dry cloth to remove any remaining moisture.

6. Using both hands, hold the center of the top cover and close the cover carefully. Be careful not to trap your fingers.

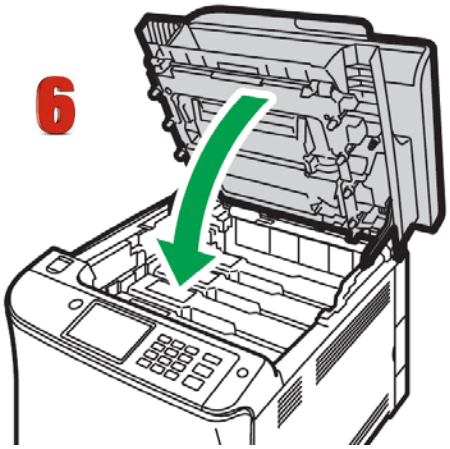

Cleaning the Registration Roller

The registration roller can become dirty with paper dust if you print to non-standard paper.

Clean the registration roller if white dots appear on prints or if prints are smeared after a paper jam is cleared.

• Do not use chemical cleaning fluids or organic solvents such as thinner or benzine.

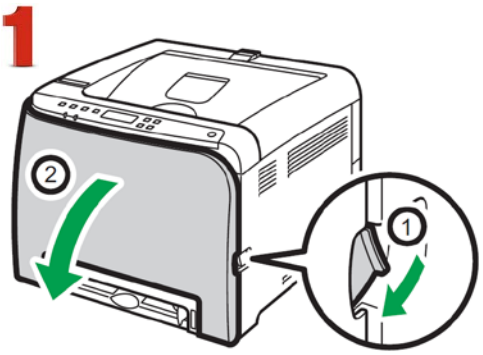

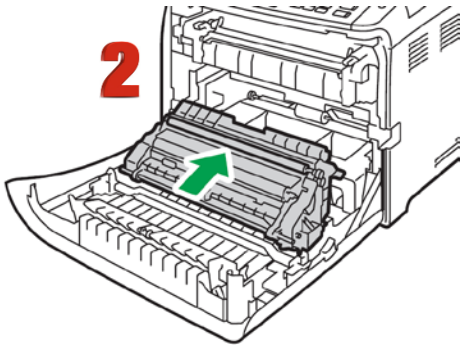

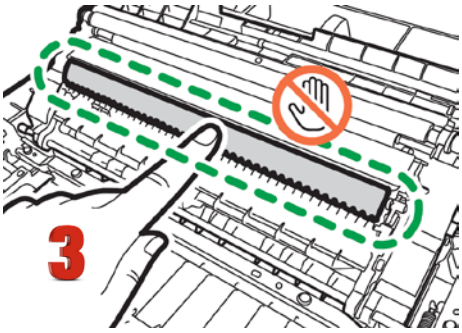

1. Turn off the power and unplug the power cord. Pull the front cover open lever and then carefully lower the front cover. Be sure to set the registration roller in the position shown by the arrow in the illustration below. Do not touch the transfer roller.

2. Clean the registration roller by applying a soft damp cloth while turning it using both hands, carefully push up the front cover until it closes.

3. When closing the front cover, push the upper area of the cover firmly.

Cleaning the Paper Tray, Friction Pad and Paper Feed Roller

If the friction pad or paper feed roller is dirty, a multi-feed or misfeed might occur. The paper tray can become dirty with paper dust if you print to non-standard paper.

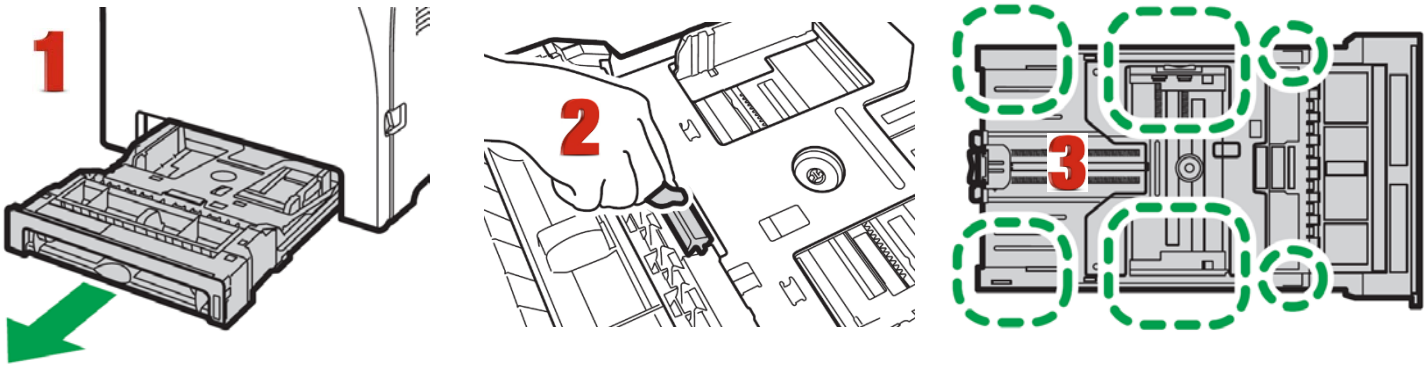

1. Turn off the power and uplug the power cord. Pull out Tray 1 carefully with both hands.

2. Place the tray on a flat surface. If there is paper in the tray, remove it.

3. Wipe the friction pads and the inside of the paper tray with a cloth.

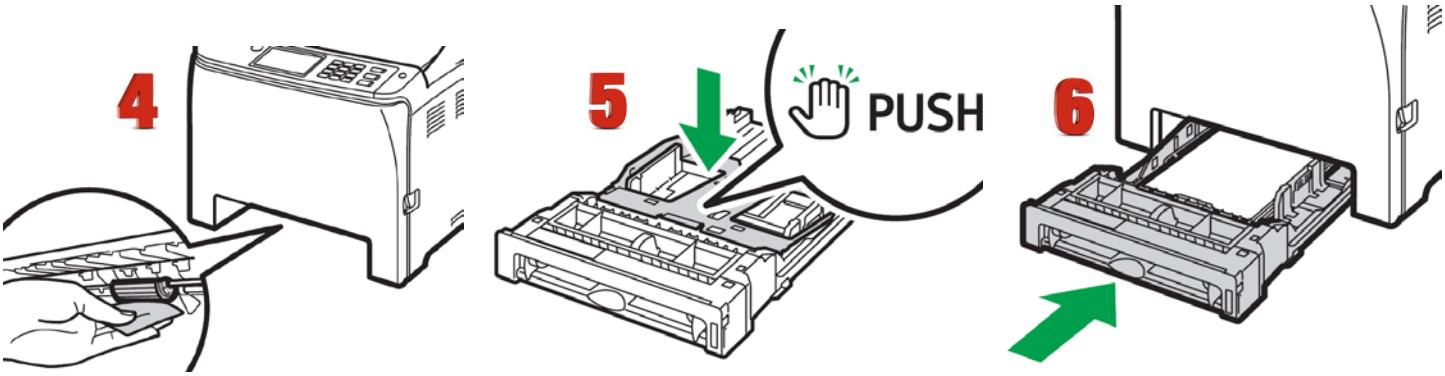

4. Underneath the printer, wipe the rubber part of the roller with a soft damp cloth. After that, wipe it with a dry cloth to remove the moisture.

5. Push the metal plate down until it clicks.

6. Reload the removed paper into the tray, and then push the tray carefully into the machine until it clicks into place.

Removing Paper Jams

Caution

• The inside of this machine becomes very hot. Do not touch the parts labeled " " (indicating a hot surface).

• Some of this machine's internal components get very hot. For this reason, take care when removing misfed paper. Not doing so could result in burns.

• Some of the internal components of this machine might be fragile. When you remove jammed paper, do not touch the sensors, connectors, LEDs, or other fragile parts that are shown in this manual. Doing so may cause malfunctions.

For the location of the sensors in the machine and extended options, see the following illustrations:

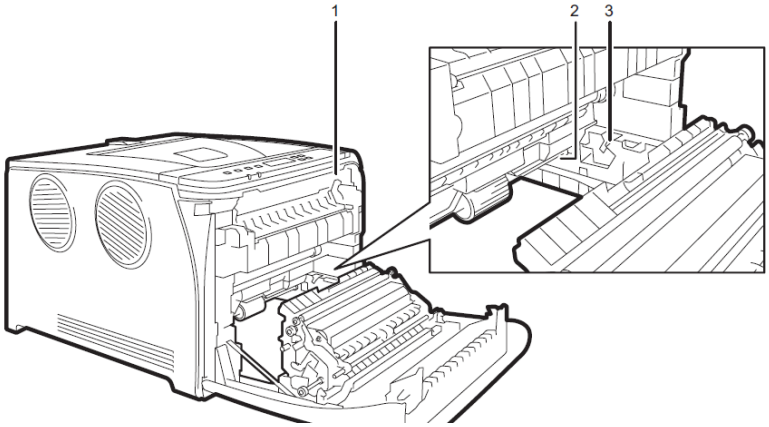

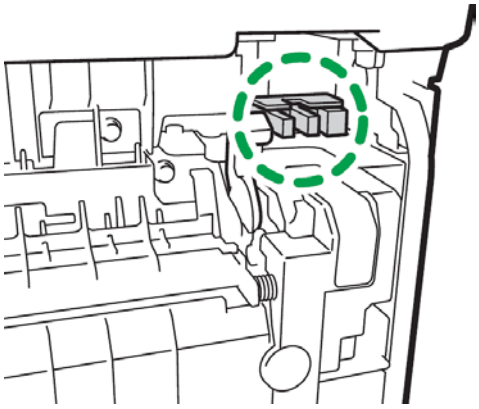

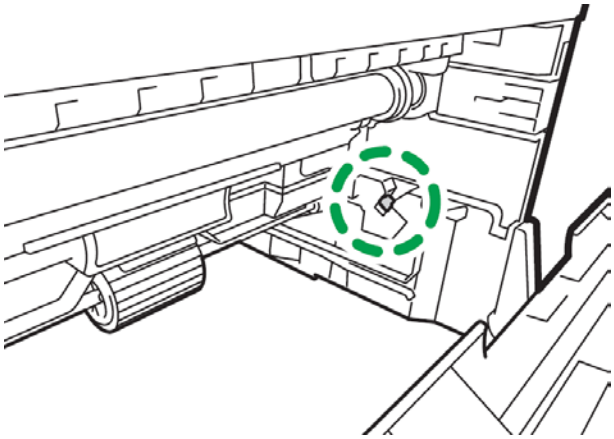

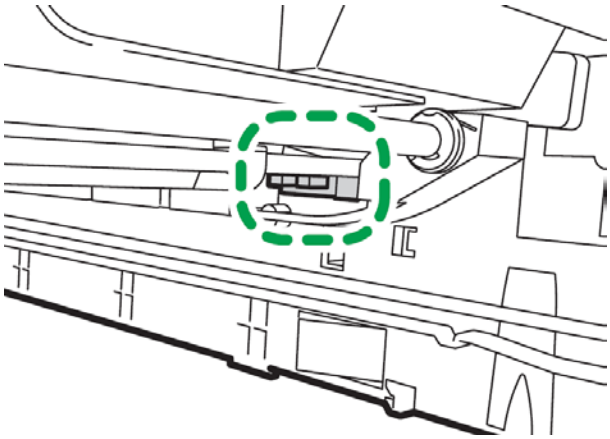

Important

• Jammed paper may be covered in toner. Be careful not to get toner on your hands or clothes.

• Toner on prints made immediately after clearing a paper jam may be insufficiently fused and may smudge. Make test prints until smudges no longer appear.

• Do not forcefully remove jammed paper, as it may tear. Torn pieces remaining inside the machine will cause further jams and possibly damage the machine.

• Paper jam can cause pages to be lost. Check your print job for missing pages and reprint any pages that did not print out.

If paper jams inside the fusing unit, follow the procedure below to remove it.

• Since the temperature around the guide is high, wait for it to cool down before checking for jammed paper.

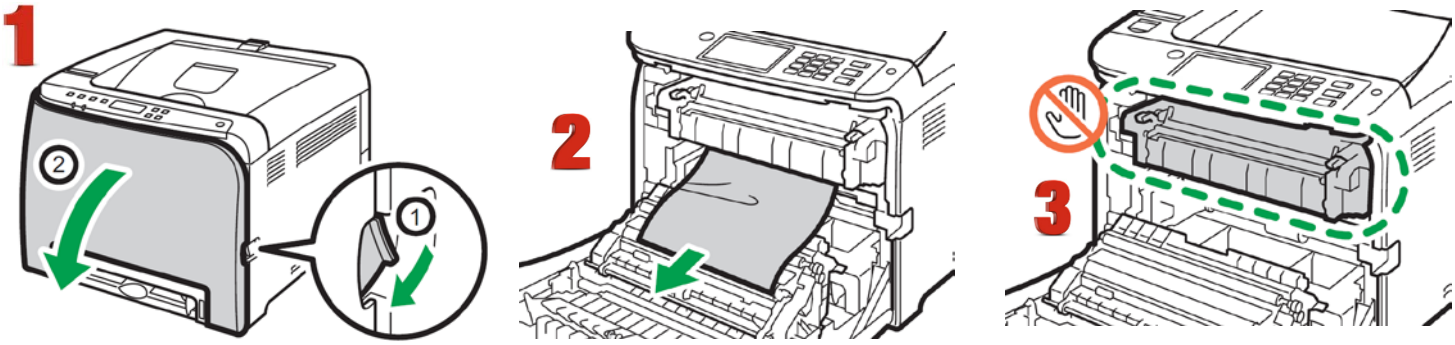

1. Pull the front cover open lever and then carefully lower the front cover.

2. Pull the paper downward to remove it. Do not pull it upward.

3. Do not touch the fusing unit.

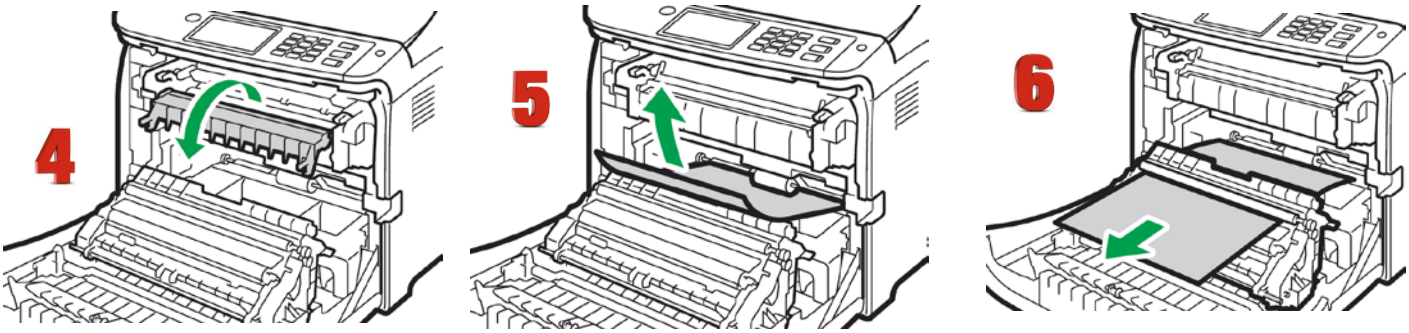

4. If you cannot find the jammed paper, check for it by pulling down the guide.

5. **If paper jams inside a tray** - Pull out the jammed paper carefully. Do not pull out the paper tray or touch the fusing unit.

6. **If paper has jammed inside the transfer unit** - Hold both sides of the paper, pull the paper carefully forward.

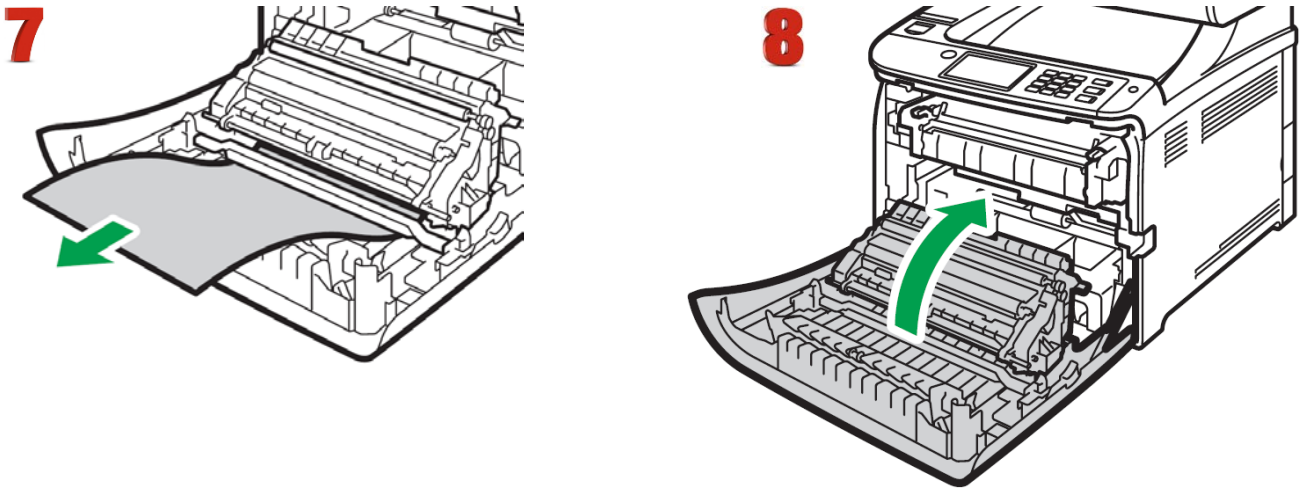

7. Then pull out

8. Once the jam is cleared, using both hands, carefully push up the front cover until it closes. When closing the front cover, push the upper area of the cover firmly. After closing the cover, check that the error is cleared.

Replacing the Fusing Unit

⚠ Make sure that the fusing unit is cool before you touch it. The fusing unit can be very hot.

1

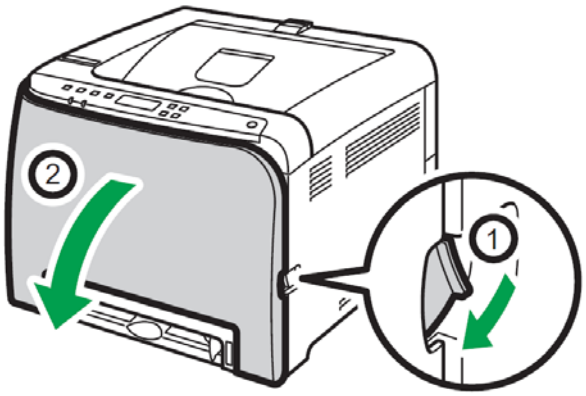

2

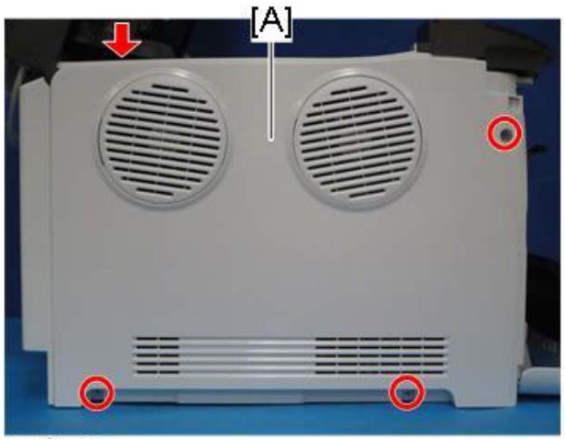

1. Open the front cover.
2. Release the top hook, remove 3 screws and remove the left cover [A].

3

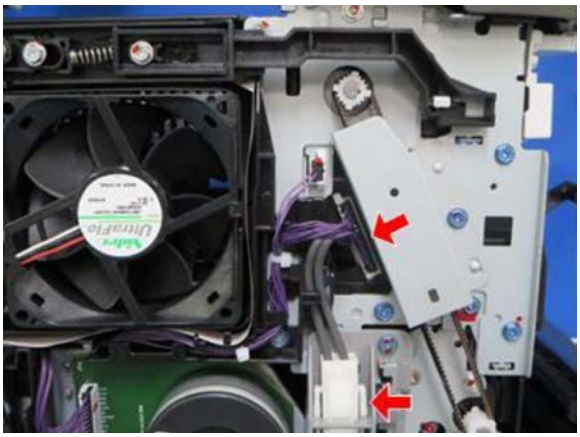

4

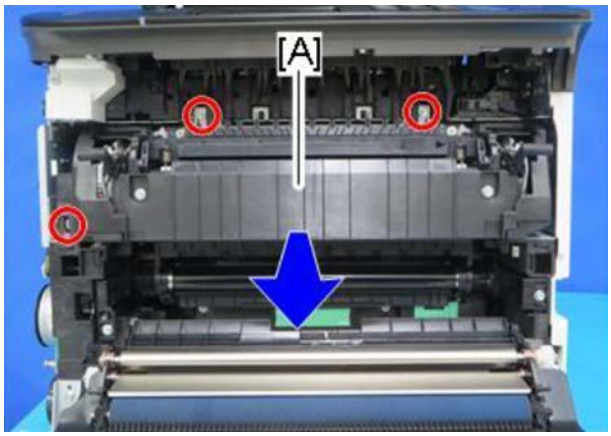

3. Carefully disconnect the two connectors.
4. Remove 3 screws from around the fusing unit and carefully pull forward with both hands.
5. To install a new fusing unit, follow the above steps in reverse order.

Resetting the Fusing Unit

If a jam occurs and the fuser requires a reset to continue, you must access the printer service mode:

1. With the printer powered on, press and hold the up & down arrow keys for 12 seconds, then press ‘OK’.
2. Select ‘Engine Maintenance’ and press ‘OK’.
3. Select ‘Fuser SC Reset’ and press ‘OK’.

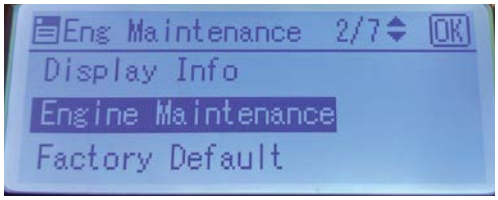

4. Select ‘Fusing SC Reset’ and press ‘OK’.
5. Press ‘OK’ to execute the reset function.

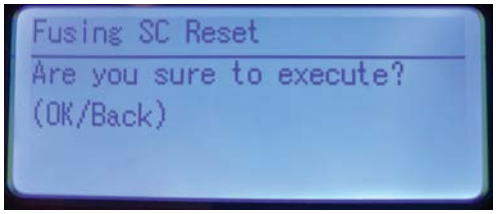

6. The result of the reset function will then be displayed.

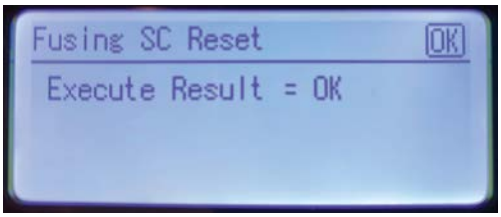

7. Then turn the machine OFF and ON. The reset procedure with then be complete.

Color Registration Procedure

If the printer registration is out of alignment, run the Color Registration Procedure

⚠ Signs of this would appear as outlines of white or color around your graphic.

1. IMPORTANT! Remove the white toner and put the printer into the CYMK configuration with the black cartridge in the first slot and the cyan in the last slot.

2. On the front of the printer, press the MENU button.

3. Press the down arrow until 'System Settings' shows on the display. Press OK.

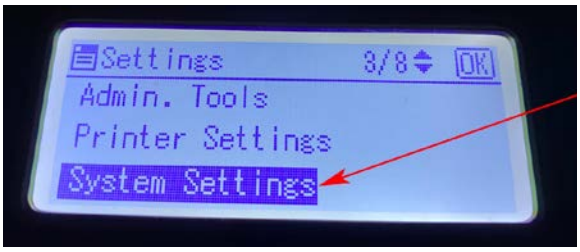

4. Press the Down Arrow until you see 'Color Den/Reg' on the display. Press OK

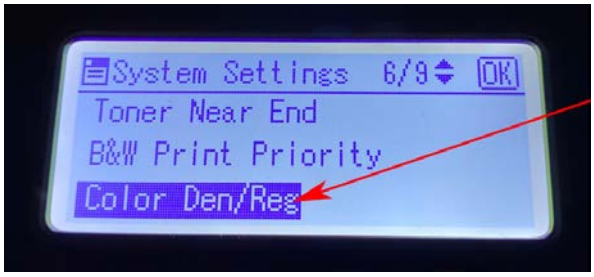

5. The Screen will ask “Are you sure to Execute?” Press OK

6. The Registration procedure will run.

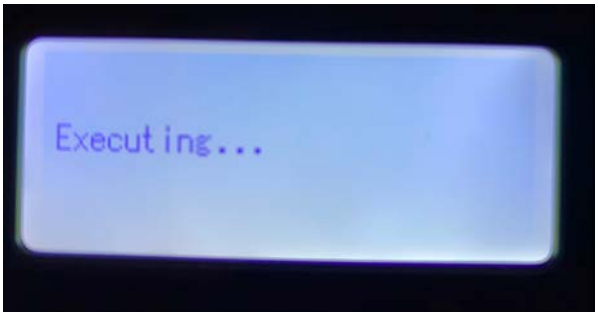

7. When finished it will show ‘Execute Result = OK’ if successful.

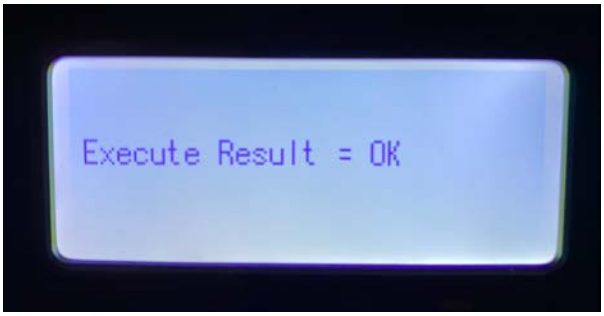

Printing Tips

When transferring images with halftones, it's possible that some of the adhesive from your 2 step paper will not transfer over to the toner during the first step. If you see this happen with your image, just reprint the image with a white overprint using ProRIP Essentials to thicken up the density and give the adhesive something to stick to. Halftone colors use much less toner. Printing the white over the image will fill in the halftones of color, with density below 70%. Using white overprint is necessary, even when transferring to white colored textiles.

There are many variables that could produce different results. Specific steps may need to be altered based on:

- Type and brand of Heat Press: The temperature and duration varies slightly based on the heat press being used. All instructions are based on using a Hotronix Fusion press. Clam shell and other types of swing away presses may also yield different results.
- Type of image: Photos or full color graphics may require a longer press time than vector images or text.
- Type of garment or substrate: Cotton, Polyester, and Spandex material all respond differently to heat, as do hard surfaces like acrylic or wood. All textile instructions are based on cotton garments.
- Toner Coverage: Halftones in image may cause undesired results. Toner coverage should not be less than 70%, otherwise there will be issues with transferring the adhesive to the transfer sheet. Halftones can be corrected by printing white on top of color using the IColor ProRIP Essentials Software to apply a white layer in one pass. This will help with toner coverage and proper adherence to the garment.

To find the serial number of your unit, there are 3 ways:
1) Printed on the outside of the box the printer shipped in.
2) Label inside the printer when you open the top lid (Right or left side bezel, underneath barcode).
2) Through the control pad on the printer: Install black cartridge > Menu > Print List/Report > OK > Configuration Page > OK. The Machine ID is your serial number.

Consult the IColor knowledge base for specific instructions on a variety of transfer paper offered at:
http://www.icolorprint.com/support
(Or scan this QR Code)

Technical Support Email: Log a ticket at https://www.icolorprint.com/get-support

Technical Support Phone: 631-590-1040, Option 2

SAVE THE BOX AND PACKAGING! Needed if the machine needs to be sent back for service.

ALSO AVAILABLE:

- **IColor Premium** 2-Step Transfer Paper for light and dark colored garments
- **IColor Select and Select Ultra Bright** 2-Step Transfer Paper for light and dark colored garments
- **IColor Standard** 2-Step Transfer Paper for light and dark colored garments
- **IColor Glitter Adhesive** 2-Step Transfer Paper (for use with IColor Standard 2-Step Transfer Paper)
- **IColor Light and Speed Trans Light** 1-Step Transfer Paper for light colored garments
- **IColor Presto** 2-Step Transfer Paper for textiles and hard surfaces
- **IColor Temporary Tattoo** 2-Step Transfer Paper
- **IColor Classic, Premium and Wood and Leather** Hard Surface 1-Step Transfer Paper
- **IColor AquaClear** 1-Step Transfer Paper for candles and other substrates not resistant to heat
- **IColor Label / Sticker** Paper (Clear and White) in Letter and Tabloid size
- **IColor Window Cling** Media (Clear and White) in Banner and cut sheet options
- **IColor Banner** Paper
- **IColor Magnetic** Media in Letter and Tabloid size

...and more! Contact your dealer for more information.

IColor™ Transfer Paper Comparison Charts

ICOLOR TEXTILE TRANSFER PAPER

ATTRIBUTE	PREMIUM	STANDARD	SELECT UB	SELECT	PRESTO	LIGHT	SPEEDTRANS LIGHT
PROCESS	2 Step	2 Step	2 Step	2 Step	2 Step	1 Step	1 Step
DURABILTY (# of Washes @ 104 °F/40 °C)	Up to 100	50+	50+	50+	50+	15+	15+
DARK TEXTILES (BRILLANCE)	BEST	BETTER	BEST	GOOD	BETTER	FAIR	FAIR
DELICATE TEXTILES	BEST	GOOD	GOOD	GOOD	GOOD	OT RECOMMEND	NOT RECOMMENDED
STRETCHABILITY	BETTER	GOOD	BEST	BEST	GOOD	GOOD	GOOD
FINISH	MATTE	SEMI GLOSS	MATTE	MATTE	SEMI GLOSS	SATIN	SATIN
TRANSFER 'A' SHEET CHARACTERISTIC	OPAQUE	TRANSPARENT	TRANSPARENT **	TRANSPARENT	OPAQUE	OPAQUE	OPAQUE
PRESS TEMPERATURE (°F/°C)	250°F / 120°C	310°F / 154°C	320°F / 160°C	310°F / 154°C	285°F / 140°C	390°F / 200°C	375°F / 190°C
PRESS TIME	30 + 30 secs	120 + 30 secs	135 + 25 secs	120 + 25 secs	120 + 30 secs	15 secs	10 secs
SOFT HAND	BEST	GOOD	GOOD	GOOD	GOOD	BETTER	BETTER
COST	$$$	$$	$$	$$	$$	$	$

ICOLOR HARD SURFACE TRANSFER PAPER

ATTRIBUTE	PREMIUM	CERAMICS	WOOD/LEATHER	PRESTO! HARD SURFACE	PRESTO! PAPER/WOOD	AQUACLEAR	2 STEP TATTOO	1 STEP TATTOO
PROCESS	1 Step	1 Step	1 Step	1 Step	1 Step	1 Step	2 Step	1 Step
DURABILTY (RESISTANT TO SCRATCHING/CHIPPING	BEST	BEST	BEST	BEST	BEST	GOOD	BETTER	GOOD
COLOR BRILLIANCE	BETTER	BETTER	BETTER	BEST	BEST	BETTER	BETTER	BETTER
METALLIC FINISH	NO	NO	NO	YES	YES	NO	NO	NO
PRESS TEMPERATURE (°F/°C)	300°F / 150°C *	300°F / 150°C *	300°F / 150°C *	320°F / 160°C *	265°F / 130°C *	N/A	265°F / 130°C	N/A
PRESS TIME	60 SECS *	180 SECS *	60 SECS *	180 SECS *	90 SECS *	N/A	40 SECS	N/A
ACRYLIC	YES	YES	YES	YES	NO	YES	YES	YES
METAL	YES	NO	NO	YES	NO	YES	YES	YES
CERAMIC	YES	YES	NO	YES	NO	YES	YES	YES
TILE	YES	YES	NO	YES	NO	YES	YES	YES
GLASS	YES	YES	YES	YES	NO	YES	YES	YES
CRYSTAL	YES	YES	YES	YES	NO	YES	YES	YES
PAPER/WOOD/CARDBOARD	YES	NO	YES	YES	YES	NO	YES	NO
LEATHER	YES	NO	YES	NO	NO	NO	YES	NO
CANDLES	NO	NO	NO	NO	NO	YES	YES	YES
FLESH	NO	NO	NO	NO	NO	NO	YES	NO
COST	$	$	$	$$	$$	$$	$$$	$$

* Temperature and press time varies based on substrate

IColor 560 System Specifications

Print Speed: Print Speed: Up to 25 ppm Color and Monochrome
(Transparency setting speeds may vary)

Processor: 350 MHz

Duty Cycle: Up to 65,000 pg/mo.

Duplex: Standard

Memory: 256 MB RAM

Resolution (Maximum): 2400 x 600 dpi

Emulation: PCL® 6, PCL 5c; PostScript® 3™ Emulated

Operating Systems: Microsoft Windows® 8 / 10 / 11 (x32 & x64)

Interfaces: 10/100-TX Ethernet, High Speed USB v2.0, Wireless LAN (IEEE 802.11 a/b/g/n/ac),

Bypass Tray: 'One at a time Feed' - A4, A5, A6, B5, B6, Legal, Letter, HLT

Paper Cassette: 250-sheet A4, A5, A6, B4, B5, Legal, Letter, HLT

Paper Sizes (Min./Max.): 3" x 5" to 8.5" x 14"

Paper Weight: Bypass Tray - 60 – 163 g/m²; Standard Tray - 60 – 163 g/m²

Power Consumption: Maximum – 1,300 watts

Size: (WxDxH): 15.7" x 17.7" x 13.1" (400 x 450 x 334 mm)

Consumables: Starter CMYK – 1,000 prints; W – 7,000 prints
Replacement CMYKW – 7,000 prints (all based on 5% coverage)

Weight: 55 lb. (25 kg)

Power Consumption (maximum): 11 amps (120v models) or 6 amps (230v models)

Power Options: 120v & 230v models